EQUIPMENT SCHEDULE

Tempered Make-Up Air Unit — **Mark: XDGX**

Qty	Accurex Model	Volume	External SP	Total SP	FRPM	Operating Power	Weight
1	XDGX-P116-H22-MF-7	3,500 CFM	0.5 in. wg	1.355 in. wg	1567	1.36 hp	2,366 lb

Motor Information

Size	V/C/P	Enclosure	Motor with Shaft Grounding	Motor RPM	Windings	MCA	MOP
1 1/2 hp	208/60/3	ODP	No	1725	1	43.3	50

Heating

Type	Gas Type	Temperature			Energy			Connection Gas	Building Gas Pressure	Control Access
		Winter DB	Max Δ	Max LAT	Input	Output	Efficiency			
Direct Gas	Natural	-4.2 F	74.2 F	70.0 F	304.9 MBH	280.5 MBH	92%	3/4"	1/2 PSI	11a

Cooling

Cooling Type	Coil Model	Rows Deep	Fins Per Inch	Face Velocity	Total Energy	Sensible Energy	Leaving Dry Bulb	Leaving Wet Bulb
Packaged DX	DX38S01Q12-32x44	1	12	358 ft/min	103.6 MBH	45.7 MBH	77.9 F	73.5 F

Coil SP	Refrigerant	Suction Temp	Liquid Temp	Super Heat	Code 18/19	Suction Conn Qty / Size	Liquid Conn Qty / Size
NA	R-410a	45.1 F	110 F	8 F	0	NA	NA

Outlet Sound Power By Octave Band

62.5	125	250	500	1000	2000	4000	8000	LwA	dBA	Sones
89.1	*89.1*	*77.5*	*75.7*	*74.9*	*70.6*	*64.6*	*59.3*	*80.1*	*69.1*	*17.3*

- *LwA - A weighted sound power level based on ANSI S1.4*
- *dBA - A weighted sound pressure level base on 11.1 dB attenuation per octave band at 5.0 ft.*
- *Noise Criteria (NC) based on an average attenuation of 11.5 dB per octave band at 5.0 ft.*

OPTIONS AND ACCESSORIES

Air Flow Arrangement: Outdoor Air Only
Weatherhood: Aluminum Mesh, 16x25x2 - (4), 12x25x2 - (2)
Damper: Inlet
Outdoor Air Intake Position: End
Discharge Position: Bottom
Coating: Galvanized
Cooling Coil Coating - None
Insulation: Double Wall - Cool Source On
Supply Fan Control: VFD
VFD Control: Constant Volume
Hinged Access
Access Side: Right-Hand
Control Center
Heat Inlet Air Sensor
Cool Inlet Air Sensor
Unit Controls: Terminal Strip
Temperature Control: Discharge
Direct Gas Options/Accessories
Approvals: ETL
FM Compliant
Flame Sensing: Flame Rod

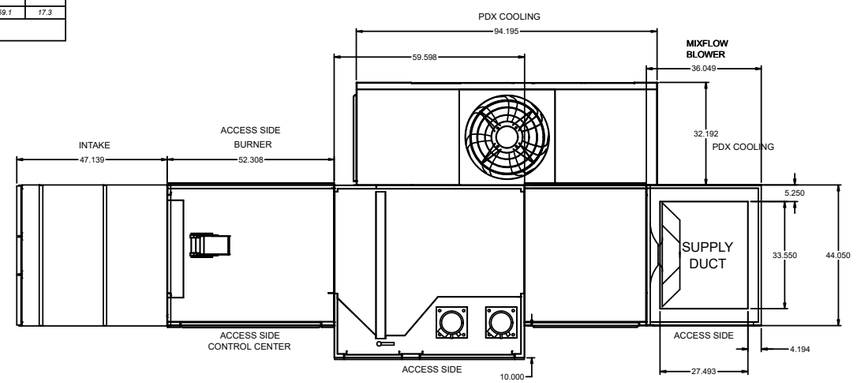

PLAN VIEW

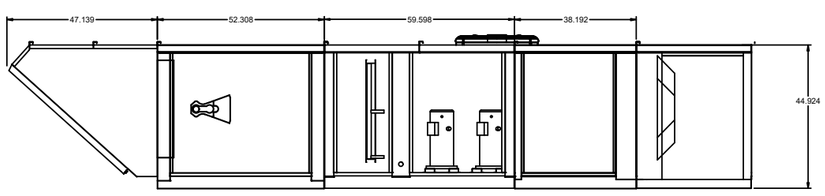

ELEVATION VIEW

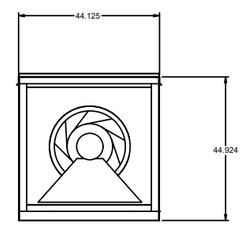

END VIEW

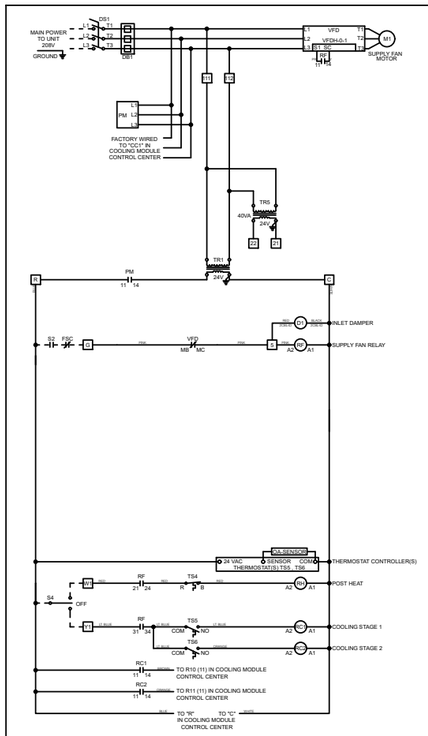

ACCUREX

Wiring Diagram Code:

AD61N402B013F30NM24

CAUTION

UNIT SHALL BE GROUNDED IN ACCORDANCE WITH N.E.C.
POWER MUST BE OFF WHILE SERVICING.

NOTES

USE COPPER CONDUCTORS ONLY
60° C FOR TERMINALS RATED LESS THAN 100 AMPS.
75° C FOR TERMINALS RATED 100 AMPS OR MORE.

FIELD CONTROL WIRING RESISTANCE SHOULD NOT EXCEED 0.75 OHM.

FIELD WIRED
FACTORY SUPPLIED AND WIRED

WIRE COLOR CODE

BK	BLACK	BL	BLUE	BR	BROWN
GY	GRAY	LT BL	LIGHT BLUE	O	ORANGE
PK	PINK	PR	PURPLE	R	RED
W	WHITE	Y	YELLOW		

LEGEND

AMP AMPLIFIER
CC# COMPRESSOR CONTACTOR
CF1 CONDENSER FAN CONTACTOR
CHR CRANK CASE HEATER
CP# COMPRESSOR
DB DISTRIBUTION BLOCK
DS1 MAIN DISCONNECT SWITCH
FSC FIRE SYSTEM CONTACT
FSG FLAME SAFE GUARD
FU# FUSE
HLC HIGH LIMIT CONTROL
HPS HIGH PRESSURE SWITCH
LPS LOW PRESSURE SWITCH
M# MOTOR
MOD MODULATING VALVE
PM PHASE MONITOR
PS2 AIR PROVING SWITCH
R10 COMP#1 INTERLOCK RELAY
R11 COMP#2 INTERLOCK RELAY
RC1 COOLING STAGE 1 RELAY
RC2 COOLING STAGE 2 RELAY
RF SUPPLY FAN RELAY
RF1 FAN ENABLE RELAY
RH HEAT RELAY
S2 FAN SWITCH
S4 HEAT AND COOL SWITCH
S5 MOTOR SELECTOR
ST# MOTOR STARTER
TR# TRANSFORMER
TS2 DISCHARGE AIR SENSOR
TS4 INLET AIR SENSOR - HEAT
TS4 INLET AIR SENSOR - HEAT
JUMPER = HEAT : DIFFERENTIAL = 2
TS5 INLET AIR SENSOR - COOL
JUMPER = COOL : DIFFERENTIAL = 5
TS6 INLET AIR SENSOR - COOL
JUMPER = COOL : DIFFERENTIAL = 5 : OFFSET = 10
TS9 LOW DISCHARGE TEMP SENSOR
JUMPER = COOL : DIFFERENTIAL = 20
V1 PILOT VALVE
V2 MAIN VALVE
VFD VARIABLE FREQUENCY DRIVE

Wiring Template: M24 DOC NUMBER: ---- REV: ----

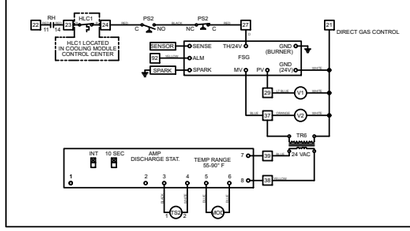

NOTE: Roof Opening Requirements:

Minimum Roof Opening: The minimum roof opening size is the illustrated duct diameter plus 0.25 in. on all sides.
For example: If the duct size is 14 x 14 in. square, the minimum roof opening size is 14.5 x 14.5 in. square.

Maximum Roof Opening: There must be a minimum perimeter of 1.75 in. between the roof opening and the roof curb.
For example: If the roof curb is 75 x 30 in. square, the maximum roof opening is 71.5 x 26.5 in. inches square.

NOTE: The weatherhood and filter sections of the make-up air unit are not supported by the curb.
This is by design, in order to help alleviate water infiltration issues.

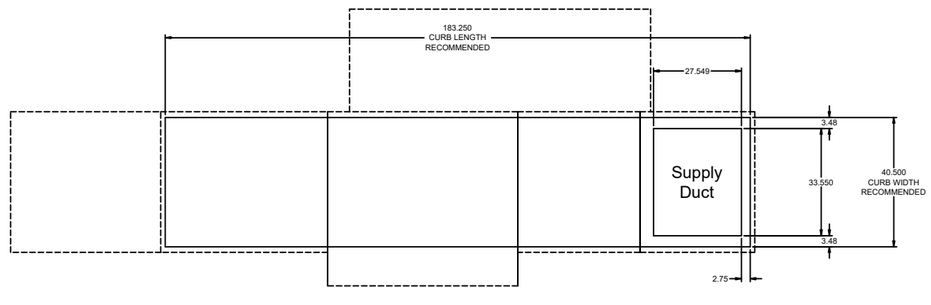

FOOTPRINT

XDGX EXAMPLE

PROJECT
5/26/2021

MARK

XDGX

ACX RD
TYLER SCHILLING
TYLER.SCHILLING@ACCUREX.COM
(800)333-1400

ACCUREX