ACCUREX®

Document 1074168
Model XRRB
Fire Ready Hood

Installation, Operation and Maintenance Manual

Please read and save these instructions for future reference. Read carefully before attempting to assemble, install, operate or maintain the product described. Protect yourself and others by observing all safety information. Failure to comply with these instructions will result in voiding of the product warranty and may result in personal injury and/or property damage.

c UL us LISTED

Listed to UL Subject 300A

General Safety Information

Personnel should have a clear understanding of these instructions and all applicable, current local and national building and fire codes before installing this product.

NOTE

All service and maintenance on the fire suppression system should be conducted by an authorized fire equipment distributor. Do not tamper with fire suppression components if not instructed to do so.

WARNING

To reduce the risk of fire, electric shock, or injury to persons, observe the following:

- Use this product only in the manner intended by the manufacturer (to cover domestic ranges used for domestic purposes).
- When cutting or drilling into wall or ceiling, do not damage electrical wiring or other hidden utilities.
- Use only rigid, metal ductwork
- This unit must be properly grounded.

To reduce the risk of range top grease fire:

- Never leave the range unattended at high settings. Boil-overs cause smoking and greasy spillovers that may ignite.
- Dense smoke from frying pans indicates cooking oil is near auto ignition – turn the burner down or off.
- Always turn the hood fan ON when part of the cooking surface is on
- Always make sure the hood grease filter is installed before cooking.
- Clean hood grease filter frequently. Do not allow grease to accumulate on filter.
- Always use proper pan size. Use cookware appropriate for the size of the surface element.
- Keep cooking areas clean and clear of combustible materials.

To reduce the risk of injury to persons in the event of a range top grease fire, observe the following:*

- SMOTHER FLAMES with a close-fitting lid, cookie sheet, or metal tray, then turn off the burner. BE CAREFUL TO PREVENT BURNS. If the flames do not go out immediately, EVACUATE AND CALL THE FIRE DEPARTMENT.
- NEVER PICK UP A FLAMING PAN. You may be burned.
- DO NOT USE WATER, including wet dishcloths or towels - violent steam explosion will result.

*Based on “Kitchen Fire Safety Tips” published by NFPA.

AVERTISSEMENT

Pour réduire le risque d’incendie, de choc électrique ou de blessure corporelle, respecter ce qui suit :

- Utiliser uniquement ce produit de la façon prévue par le fabricant (pour couvrir les cuisinières domestiques utilisées à la maison).
- Lors de la découpe ou du perçage de murs ou plafonds, ne pas endommager les câbles électriques et autres conduites masquées.
- Utiliser uniquement un réseau de gaine rigide, en métal.
- Cet appareil doit être bien raccordé à la terre.

Pour réduire le disque d’incendie de graisse sur le dessus de la cuisinière :

- Ne jamais laisser la cuisinière sans surveillance à des réglages élevés. Les débordements causent de la fumée et des débordements de graisse qui peuvent s’enflammer.
- Une fumée dense provenant de poêles à frire indiquent que l’huile à friture s’approche de son point d’inflammation spontanée. Régler le bruleur plus bas ou l’éteindre.
- Toujours activer le ventilateur de la hotte lorsqu’une partie de la surface de cuisson chauffe.
- Toujours s’assurer que le filtre de graisse de la hotte est installé avant la cuisson.
- Nettoyer fréquemment la graisse du filtre de la hotte. Ne pas laisser s’accumuler la graisse sur le filtre.
- Toujours utiliser la taille appropriée de poêle à frire. Utiliser une batterie de cuisine proportionnelle à la surface de l’élément.
- Garder propre l’aire de cuisson et dégagée de toute matière combustible.

Observer les points suivants pour réduire le risque de blessures aux personnes advenant un incendie de graisse sur le dessus de la cuisinière :*

- ÉTOUFFER LES FLAMMES à l’aide d’un couvercle ajusté, d’une plaque à biscuits ou d’un plateau en métal, puis fermer le brûleur. S’ASSURER D’ÉVITER DES BRÛLURES. Si les flammes ne s’éteignent pas immédiatement, ÉVACUER LES LIEUX ET APPELER LE SERVICE D’INCENDIE.
- NE JAMAIS SAISIR UNE POÊLE EN FLAMME. Vous pourriez vous brûler.
- NE PAS UTILISER D’EAU, ni de linges à vaisselle ni de serviettes mouillées car il pourrait se produire une violente explosion de vapeur.

*Basé sur les « Kitchen Fire Safety Tips » (Conseils de sécurité sur les incendies de cuisine) publiés par la NFPA

Receiving

Product should arrive in a large carton. Upon receiving the product, check to ensure all items are accounted for by referencing the delivery receipt or packing list. Inspect each crate or carton for shipping damage before accepting delivery. Alert the carrier of any damage detected. The customer will make notation of damage (or shortage of items) on the delivery receipt and all copies of the bill of lading which is countersigned by the delivering carrier. If damaged, immediately contact your Accurex Representative. Any physical damage to the unit after acceptance is not the responsibility of the manufacturer.

Unpacking

Verify that all required parts and the correct quantity of each item have been received. If any items are missing, report shortages to your local representative to arrange for obtaining missing parts. Confirmation of shipment(s) must be limited to only items on the bill of lading.

Parts Checklist

- ☐ Hood with factory-installed Fire Suppression System
  - Finished Top (optional)
  - Ceiling Enclosures (optional)
- ☐ LED Lights (Qty. 2)
- ☐ Wall Mounting Bracket
  - Wall Bracket Connecting Braces
- ☐ Gas Disconnect (optional)
  - 3/4 inch Gas Valve (plugs into gas shut off assembly box)
  - Gas Shut Off Assembly Box with Range Receptacle
  - Includes One (1) 13 ft. Cable
- ☐ Electrical Disconnect (optional)
  - Electric Shut Off Assembly Box with Range Receptacle
  - Includes One (1) 13 ft. Cable
- ☐ Shipped Loose User Interface (optional)
  - Includes One (1) 10 ft. Cable
- ☐ Manual Pull Station (optional)
  - Includes One (1) 30 ft. Cable
- ☐ Horn Strobe (optional)
  - Includes One (1) 8 ft. Cable
- ☐ Wall Cap (optional)
- ☐ K-Class Portable Fire Extinguisher (optional)
- ☐ Fire Test Cylinder (optional)

Handling

Handle hood and accessories in such a manner as to keep from scratching or chipping the coating. Damaged finish may reduce ability of unit to resist corrosion.

Storage and Install Location Requirements

Units are protected against damage during shipment. If the unit cannot be installed and operated immediately, precautions need to be taken to prevent deterioration of the unit during storage. The user assumes responsibility of the unit and accessories while in storage. The manufacturer will not be responsible for damage during storage. The suggestions are provided solely as a convenience to the user.

The ideal environment for the storage of units and accessories is indoors, above grade, in a low humidity atmosphere which is sealed to prevent the entry of blowing dust, rain, or snow. Temperatures should be evenly maintained between 32°F (0°C) and 120°F (49°C). All accessories must be stored indoors in a clean, dry location.

WARNING
The fire suppression system needs to be stored and installed in locations where the temperature will not fall below 32°F (0°C) and not exceed 120°F (49°C) for proper operation.
AVERTISSEMENT
Le système extincteur d'incendie doit être entreposé et installé dans des endroits où la température ne descend pas sous 0°C (32°F) et ne dépasse pas 49°C (120°F) pour un bon fonctionnement.

Table of Contents

General Safety Information 1
Receiving, Unpacking, Parts Checklist,
Handling and Storage 2
Model Number Code. 3
Hood Exploded View. 3
Ventilation and Fan Type Configurations 4
Wiring Diagram Example: Electric Disconnect 5
Wiring Diagram Example: Gas Disconnect. 6
Installation
Dimensional Data. 7
Ductwork 8
Hood 8-9
Range Disconnect
Disconnect Box 10-11
NEMA Receptacle Model Options. 12
Gas Valve 12
Accessories
Remote Mounted User Interface 13
Finished Top. 13
Wall Cap. 13
Ceiling Enclosures 13
Manual Pull Station 14
Horn Strobe 14
Fire Extinguisher 14
Electrical Connections
Hood Controls / Lights Power 15
Fan Power - Integral Fan – Front Recirculation. . 16
Range Disconnect 16-17
Accessories
Remote Mounted User Interface 18
Manual Pull Station 18
Horn Strobe 18
Other External Devices
Supply Fan Run Contacts 18
Supply Fan Speed Control (0-10VDC Out) 18
Fire/Fault Contacts 18
Fan Calibration 19
Operation
Unit Pre-Suppression Functions 20
Arming the System 20
Fire Prevention Tips 21
Service and Maintenance
Accessing Internal Components 21
Fire System Diagnostics 22
Fire System Shut Off Sequence 22
Fire System Detect Mode (Normal Operation). . . 22
Fire System Fault Mode. 22
Fire System High Temp Mode 22
Fire System Alarm Mode 23
After Actuation 23
Performing Fire Test. 23
User Interface (UI) Operation–End User 24-25
UI Settings Navigation–Factory Servicer 26-27
Routine Maintenance 28
Troubleshooting. 29-30
Parts List 31
U1 Control Assembly Fastener Details 32

Model Number Code

XRRB - W- 36 - F - E1 - N

Model
Residential
Range
Suppression

Configuration
W - Wall

Length
30 inches
36 inches

Ventilation
F - Integral Fan - Front Recirculation
R - Integral Fan - Rear Discharge
I - Integral Fan - Top Discharge

Range Disconnect Type
E1 through E10 - Electric
G - Gas

NFPA 101 Compliance
X - Noncompliant
N - Compliant

Example: XRRB-W-36-F-G-N
Accurex XRRB, wall mount, 36 inches long, with integral fan - front discharge, with gas disconnect, and NFPA 101 Compliant

Hood Exploded View

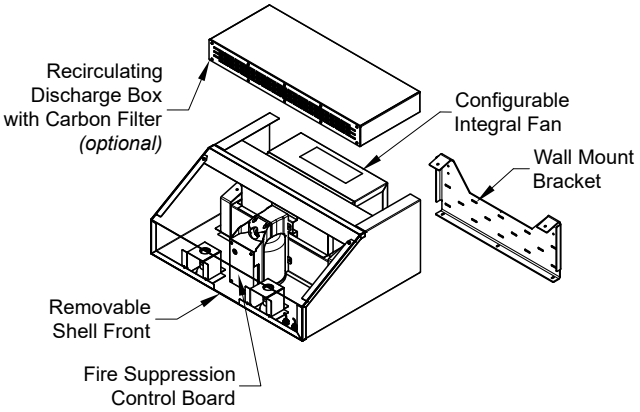

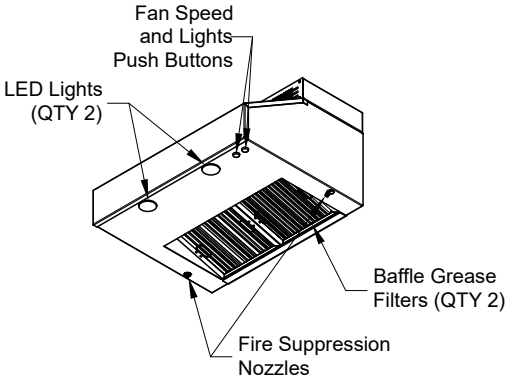

Ventilation and Fan Type Configurations

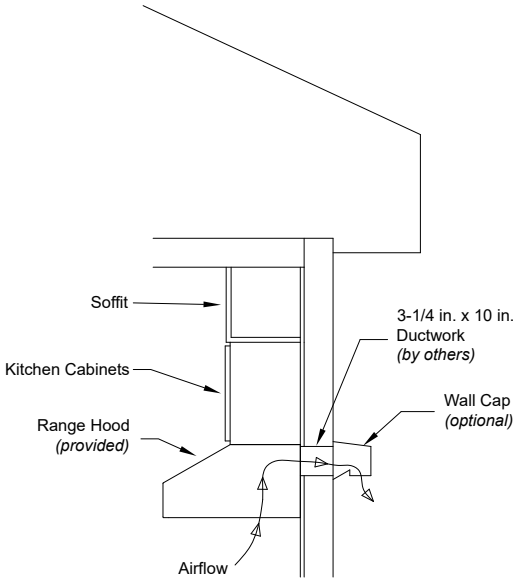

Integral Fan | Rear Discharge

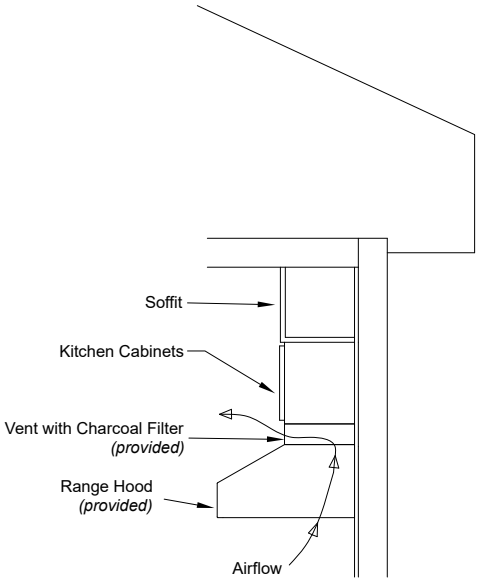

Integral Fan | Front Recirculation

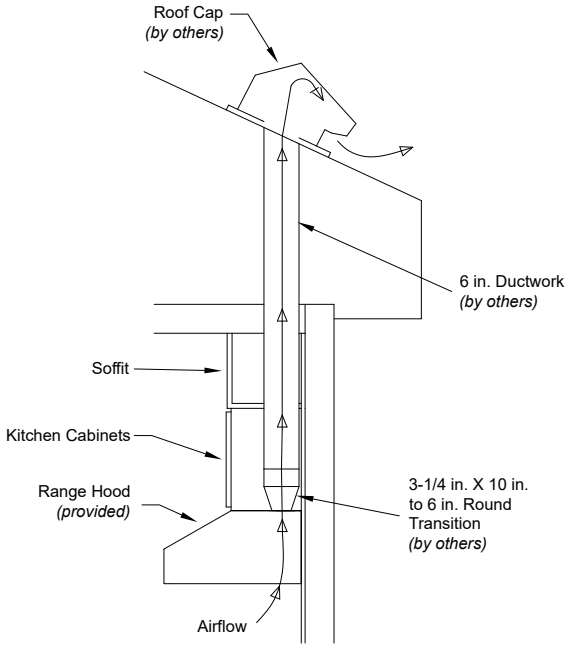

Integral Fan | Top Discharge
6” Round Duct

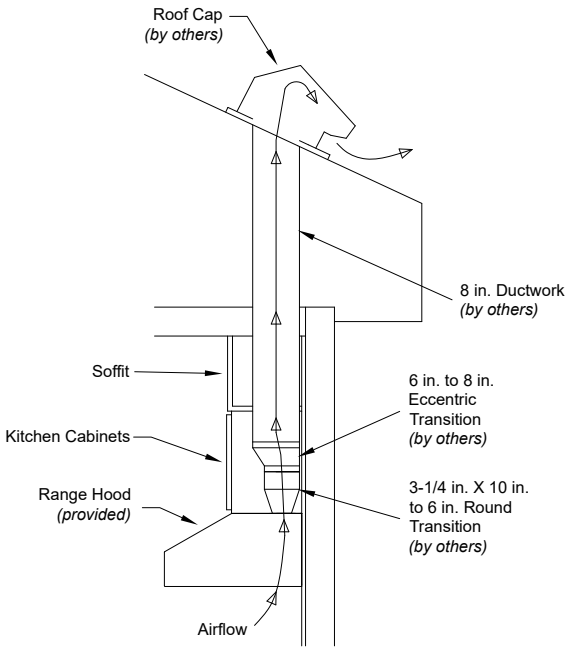

Integral Fan | Top Discharge
8” Round Duct

Wiring Diagram Example: Electric Disconnect (NEMA 14-50)

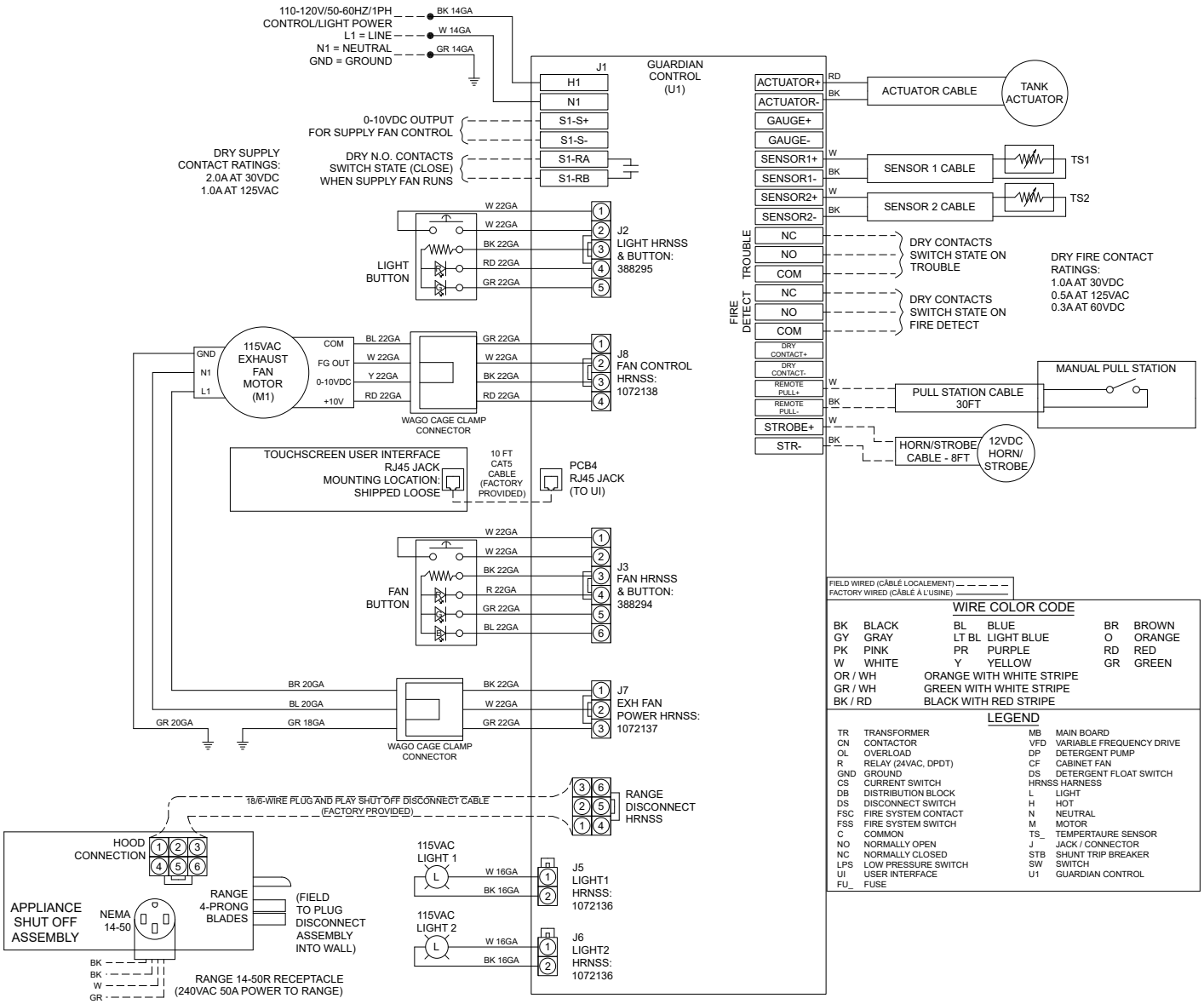

Wiring Diagram Example: Gas Disconnect

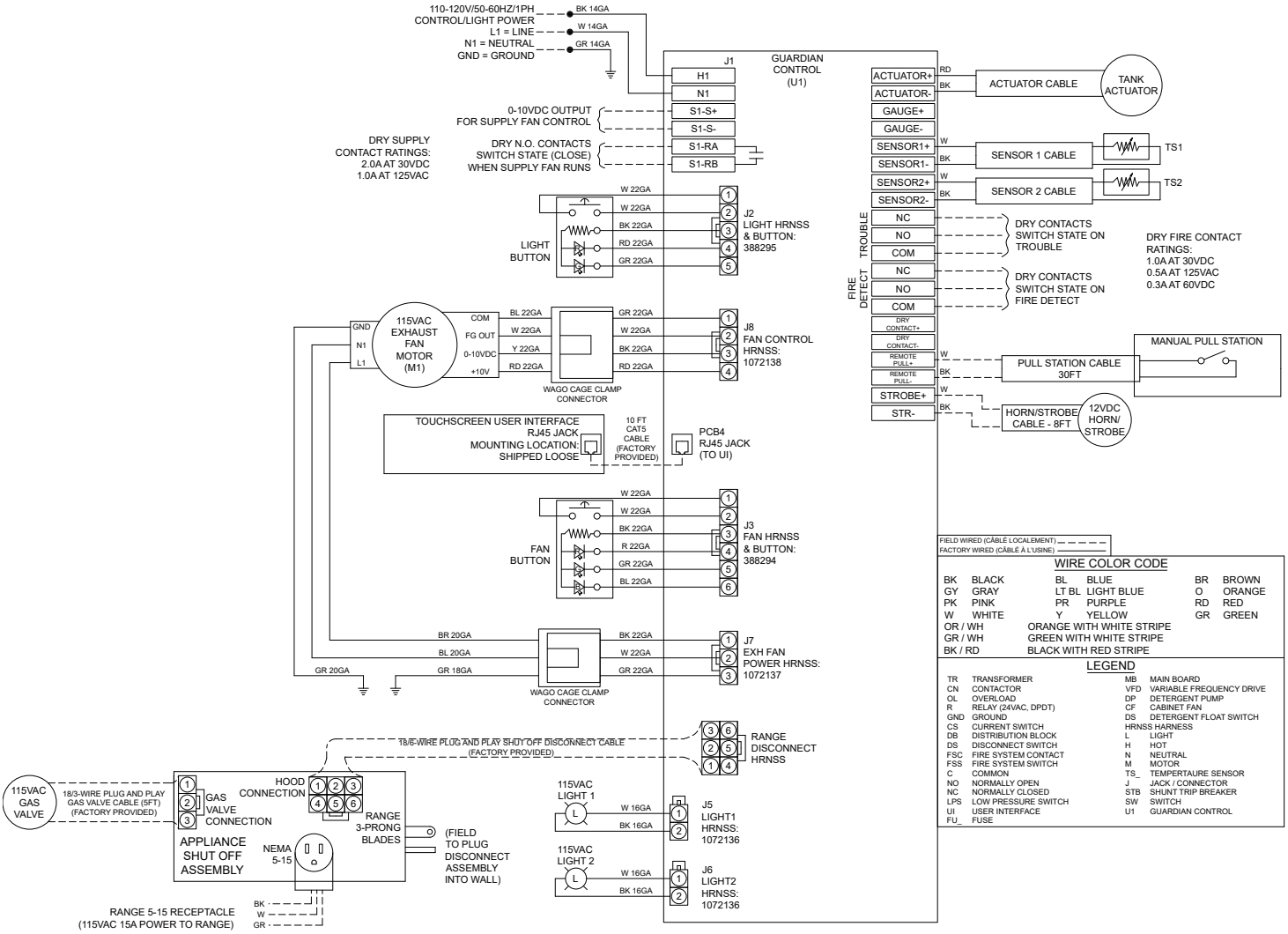

Installation

WARNING		
Failure to affix the mounting bracket to blocking correctly can lead to structural damage and/or serious injury. The structural integrity of the wall is the responsibility of the contractor.	**Hood Weight**	
	30 inches	86 lbs.
	36 inches	93 lbs.
AVERTISSEMENT		
Si le support de fixation est mal posé sur les montants, il peut y avoir des dommages structuraux et/ou de graves blessures. L'entrepreneur est responsable de l'intégrité structurale du mur.	**Poids de la hotte**	
	76 cm (30 po)	39 kg (86 lb)
	91,4 cm (36 po)	42,2 kg (93 lb)

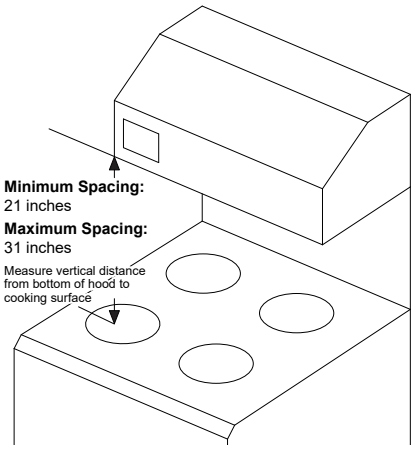

Hood to Cooking Surface Spacing Recommendation

It is recommended that before drywall is hung, all electrical cables that need to be run within the wall should be run through the wall to their corresponding components. All critical mounting points must be secured to studs or blocking. Hood needs to be centered above the range and within the height requirements shown. Make sure that with integral fan – rear discharge configurations, to leave space for rear discharge duct. After drywall is hung, affix mounting bracket to wall using the necessary field provided fasteners through the critical mounting points.

Dimensional Data

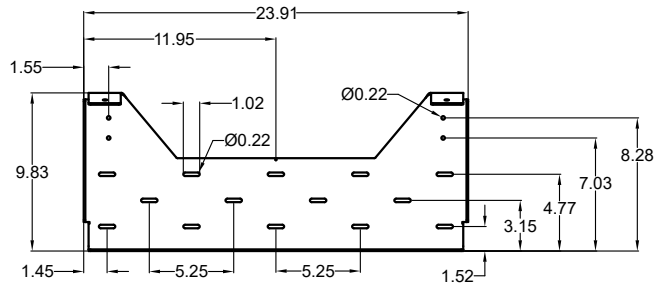

Dimensions shown are in inches

30 Inch and 36 Inch | All Configurations

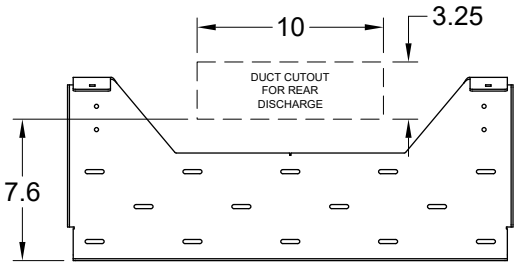

Dimensions shown are in inches

30 Inch and 36 Inch | Rear Discharge Duct Location

Mounting Bracket Key	
A	Critical mounting points must be secured to studs or blocking. All (4) must be used.
B	Utilize (6) of these critical points for securing to studs or blocking. Minimum of (2) staggered per row.
C	Cutout notch indicates wall bracket center

1. Before mounting, situate mounting bracket on wall making sure critical mounting points are met and distance from bottom of bracket to cooking surface is between 24 and 30 inches.
2. For hoods with a rear discharge configuration, ensure to leave a cutout for the duct
3. Secure mounting bracket to wall using the proper field provided fasteners through all critical mounting points shown in the drawings. Select fasteners that will properly support the total weight of the hood (hood weight shown).

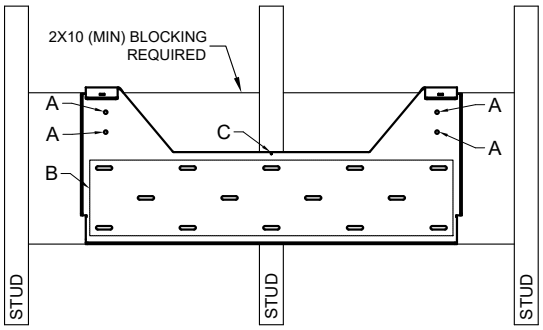

Dimensions shown are in inches

Ductwork (if applicable)

Running ductwork will be required for hoods configured for top discharge. A small rectangular piece of duct spanning the width of the wall will be required for integral fan – rear discharge configurations (discharging through the back wall). Check the individual hood drawings to see what fan type is provided with your system.

Hood Length (in.)	NFPA 101 Compliance	Ventilation	CFM	Duct Size (Minimum)	Equivalent Duct Length (Maximum)
30 and 36	No	Integral Fan - Front Recirculating	500	Not Applicable	Not Applicable
		Integral Fan - Rear Discharge	500	3-1/4 x 10 in.	2 ft.
		Integral Fan - Top Discharge	500	6 in. Round (Diameter)	30 ft.
				8 in. Round (Diameter)	50 ft.
	Yes	Integral Fan - Front Recirculating	500	Not Applicable	Not Applicable
		Integral Fan - Rear Discharge	500	3-1/4 x 10 in.	2 ft.
		Integral Fan - Top Discharge	500	6 in. Round (Diameter)	30 ft.
				8 in. Round (Diameter)	50 ft.

All ductwork will need to be provided in the field. Installing ductwork must be done by qualified person(s) in accordance with all applicable codes and standards. All ductwork, per IMC Section 505 should be constructed of sheet metal, have smooth inner walls, be air tight, and be independent of all other exhaust ductwork systems. To minimize static pressure losses and promote adequate airflow, minimize duct run lengths where possible.

Hood

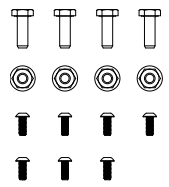

INCLUDED HARDWARE

(4) 1/4-20 X 0.75" BOLTS

(4) 1/4-20 NUTS

(4) #8-32 X 0.4375" SCREWS (FRONT DISCHARGE ONLY)

(3) #8-32 X 0.4375" SCREWS

1. Remove the front recirculation box or the finished top from the hood (if included). (Note: Do not tip the front recirculation box as this could dislodge the carbon filter)
2. Remove hood from crating. Remove grease filters so they do not fall out during installation.
3. For hoods selected as rear discharge, follow the steps below to convert the default top discharge configuration to rear discharge. Remove finished top if applicable.

NOTE

Fan cables should be long enough to allow changing fan discharge position without having to disconnect the fan cables, but cable ties may need to be cut to allow more room.

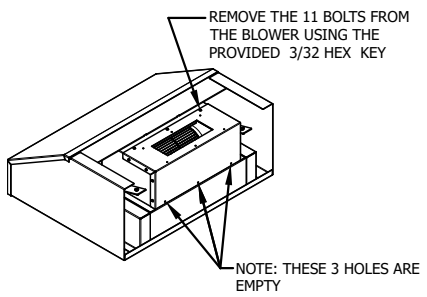

STEP 1

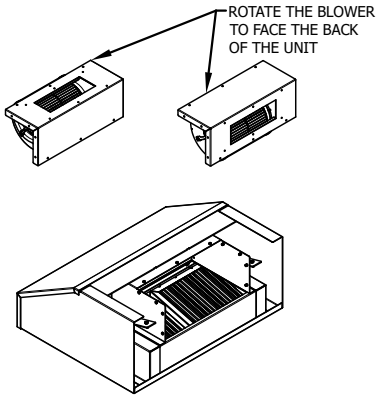

STEP 2

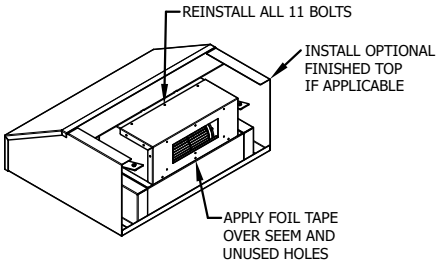

STEP 3

4. Remove the hood front, set aside.

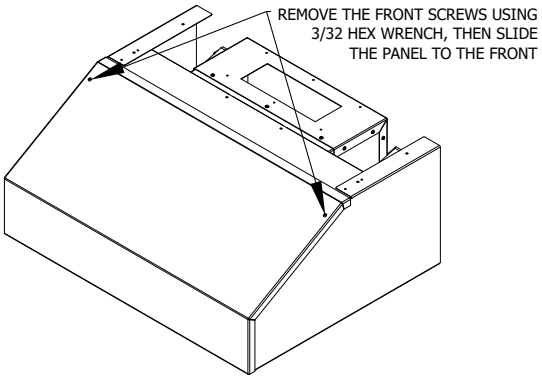

5. While holding the hood up, bolt the hood to the wall bracket connecting brace using the holes that line up the best with a 1/4-20x0.75” bolt.

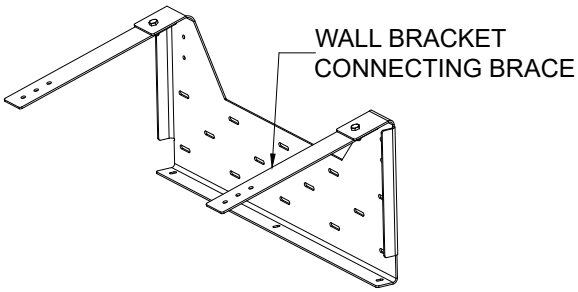

6a. Install the front recirculation box (if included) using (4) #8-32 screws from the bottom.

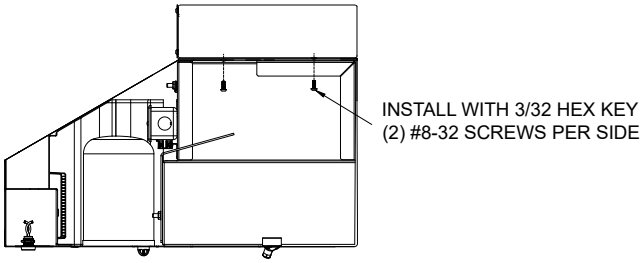

6b. Install the finished top (if included) by removing the (2) #8-32 screws from the top the hood, adding the finished top, and then reinstalling the (2) #8-32 screws.

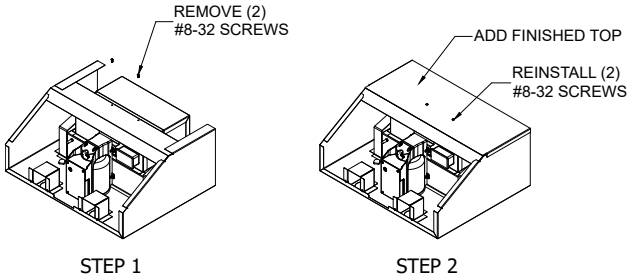

7. Carefully lift the hood onto the lower flange of the wall mounting bracket.

8. While holding the hood up, bolt the hood to the wall bracket connecting brace using the holes that line up the best with a 1/4-20x0.75” bolt. Bolts are provided by the factory.

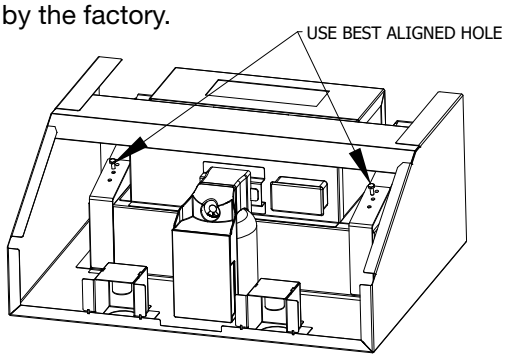

9. Install (3) #8-32 screws through the bottom of the lower wall bracket flange and into the hood.

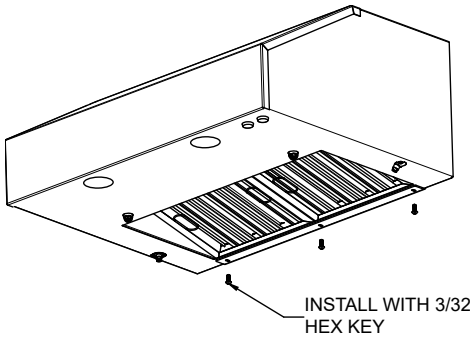

10. Reinstall hood front, reverse of step 3

11. When all construction is complete, remove protective plastic sheeting from hood stainless steel. Clean (using alcohol and rag) and polish (using stainless steel polish) the hood. When cleaning or polishing, be sure to wipe with the grain and not against it.

Range Disconnect Box

1. Locate shut off disconnect box.
2. If box has plug built-into it, plug the box into it's corresponding NEMA outlet near the range. If the box does not have a built-in plug, locate the box behind the range and recess it into the wall, using pre-drilled holes on left and right sides to affix the box to a stud using field supplied fasteners. Or, surface mount the box to the wall using field provided fasteners.

NOTE
Make sure to mount shut off box within 5 feet of powered outlet if it's provided with a cordset, as cordset will be 5-feet long.

3. Cable provided that connects the disconnect box to the hood is 13ft long, standard. It is recommended that the cable be fed through the wall through 3/4" conduit (field provided), using a single-gang j-box with pass through plate (field provided) on left side wall bracket. Another single-gang j-box with pass through plate (field provided) should be placed behind range for feeding 13ft cable through to the pluggable appliance disconnect box, unless the appliance disconnect box is recess mounted inside the wall. If recessed into the wall, the 13ft conduit and cable can be run directly to the disconnect box.

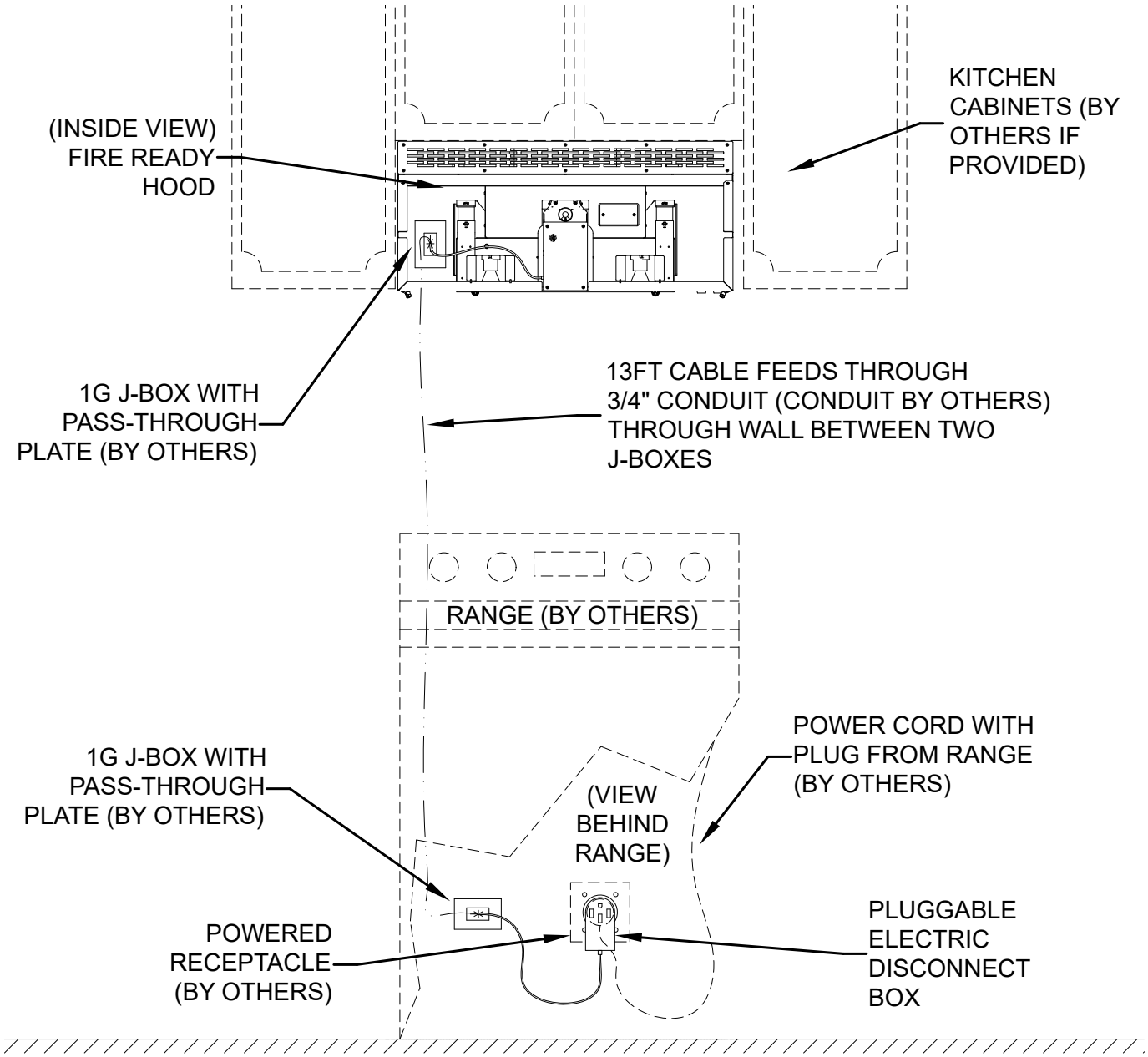

4. Follow electrical installation instructions for disconnect box on page 15.

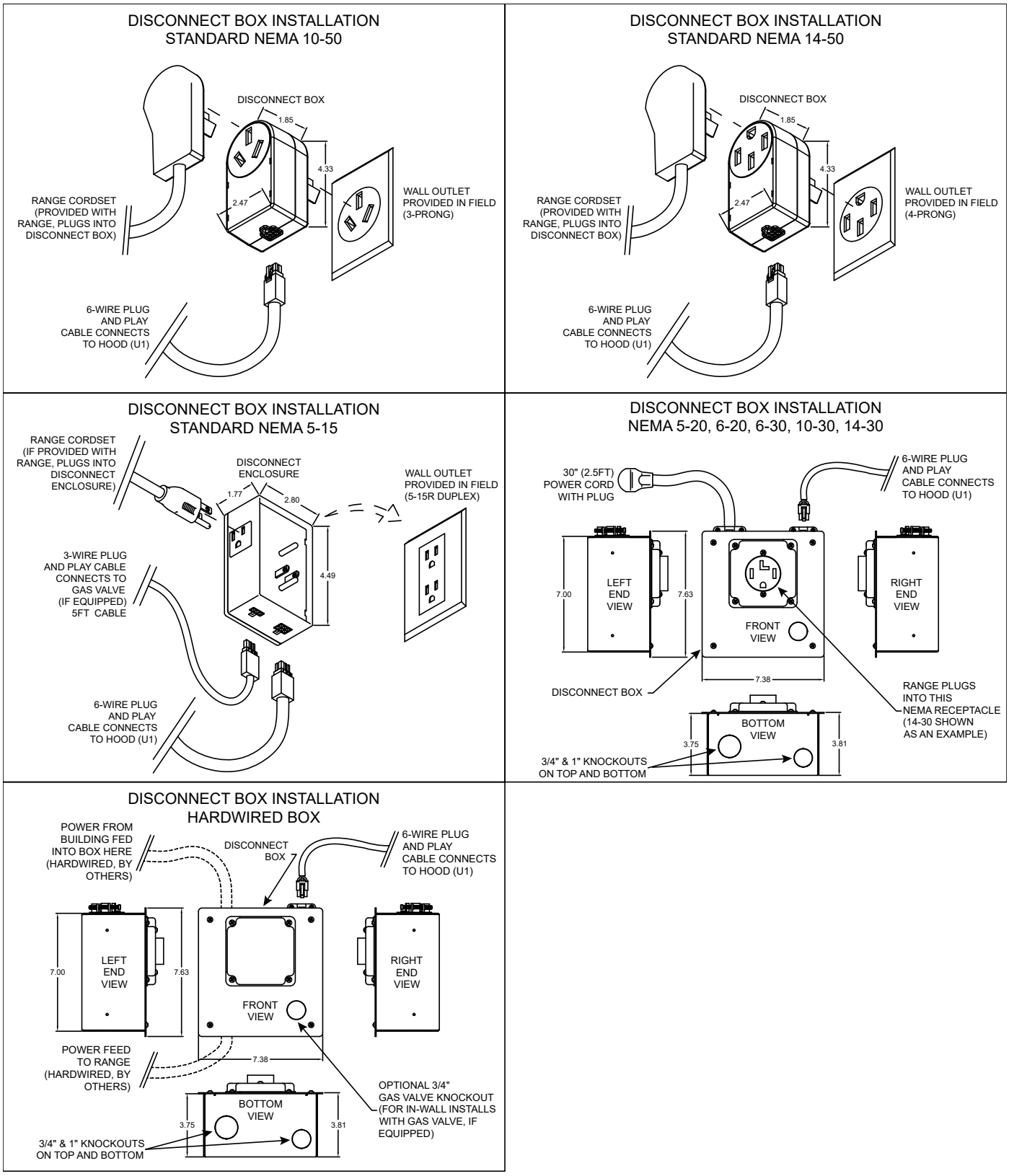

NEMA Receptacle Model Options

Voltage	NEMA	15 Ampere Receptacle	15 Ampere Plug	20 Ampere Receptacle	20 Ampere Plug	30 Ampere Receptacle	30 Ampere Plug	50 Ampere Receptacle	50 Ampere Plug	Model Designation
125V	5	5-15R	5-15P	5-20R	5-20P					15 AMP - E1 20 AMP - E2
250V	6			6-20R	6-20P	6-30R	6-30P			20 AMP - E3 30 AMP - E4
250V	10					10-30R	10-30P	10-50R	10-50P	30 AMP - E5 50 AMP - E6
250V	14					14-30R	14-30P	14-50R	14-50P	30 AMP - E7 50 AMP - E8

Gas Valve

1. Locate gas valve.
2. Plug gas valve 5-ft. whip into bottom of shut-off disconnect box. Install ¾-inch (NPT fittings) gas valve in-line with gas line to range.
3. Follow electrical installation instructions for disconnect shut-off box on page 15.

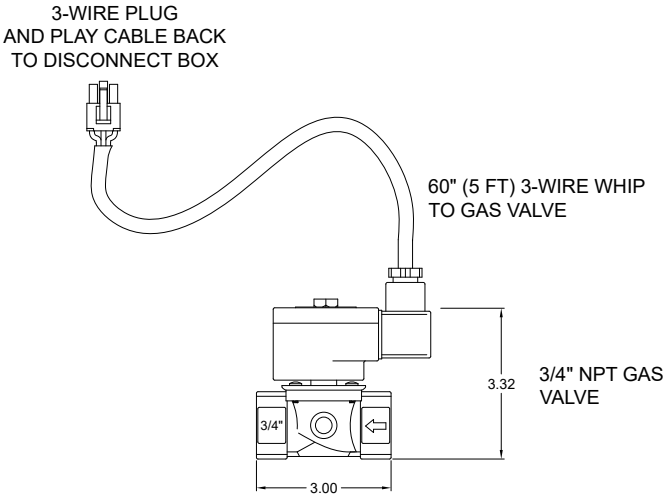

Accessories

Remote Mounted User Interface (if applicable)

Skip these steps if there is no ship loose touchscreen user interface.

1. Recess mount the user interface box near hood (cable provided is 10 feet in length).
2. Follow electrical instructions for remote mounted user interface on page 18.

NOTE

To comply with ADA standards, interface (if mounted on an unobstructed wall) must be a max of 48 inches off the finished floor.

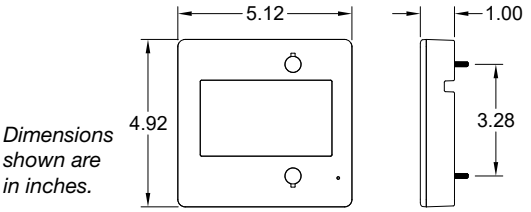

Dimensions shown are in inches.

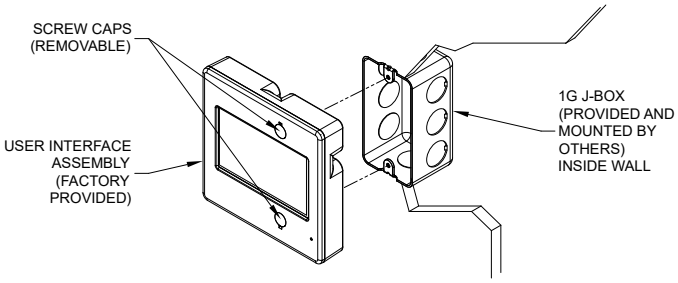

Finished Top (if applicable)

If provided with a finished top, the top piece will be attached to the hood when shipped.

1. Remove the finished top piece after mounting the hood. Once the hood is fully installed and armed, fasten the finished top piece to the top of the hood using fasteners provided.

Wall Cap (if applicable)

A wall cap with a built in bird screen and damper may be provided for configurations that exit the building through an external wall.

1. Once wall mounting bracket is installed, cut hole in wall and install 3-1/4 X 10 inch duct to line up with hood opening.
2. On outside wall, affix wall cap to cover duct opening. Seal all joints to prevent air and water leaks.

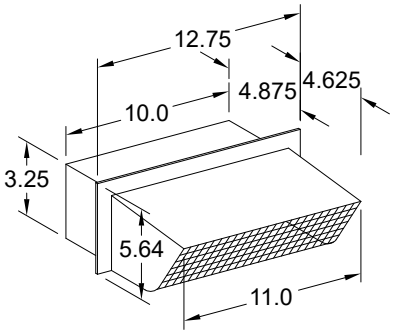

NOTES:
1) STEEL CONSTRUCTION WITH BLACK ENAMEL FINISH
2) FOR OUTSIDE WALL APPLICATIONS
3) BUILT-IN BIRDSCREEN AND DAMPER
4) TO USE WITH 3-1/4 x 10 INCH DUCT (PROVIDED BY OTHERS)

Dimensions shown are in inches.

Ceiling Enclosures (if applicable)

Ceiling enclosures may be included with the system to close off the top of the hood and hide ductwork if no kitchen cabinets enclose the top of the hood.

1. Remove screws that attach enclosure mounts to enclosure panels.
2. Fasten enclosure through pre-drilled holes to wall using appropriate field provided fasteners.
3. Attach enclosure panels to enclosure mounts using the screws removed in step 1.

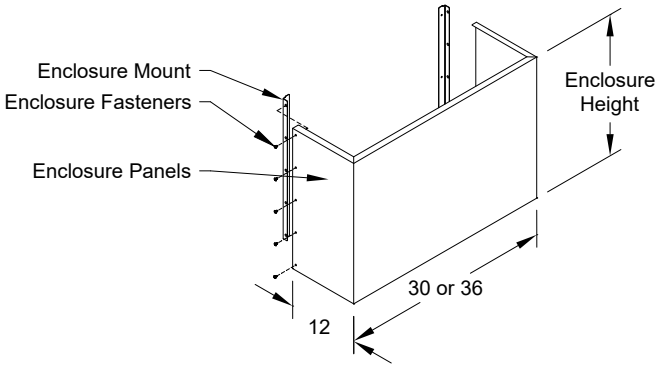

Dimensions shown are in inches.

Manual Pull Station (if applicable)

A manual pull station may be included to manually trigger and discharge the hood fire suppression

1. Surface mount the manual pull station near the hood within the path of egress (cable provided is 30 feet in length).
2. Follow electrical installation instructions for manual pull station on page 18.

NOTE

To comply with ADA standards, pull station (if mounted on an unobstructed wall) must be a max of 48 inches off of the finished floor.

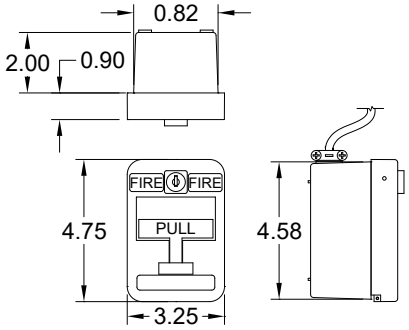

Dimensions shown are in inches.

Horn Strobe (if applicable)

If the facility does not have a fire alarm panel, a 12VDC horn strobe can provide visual and audible notification of a fire.

1. Surface mount the horn strobe near the hood (cable provided is 8 feet in length).
2. Follow electrical installation instructions for horn strobe on page 18.

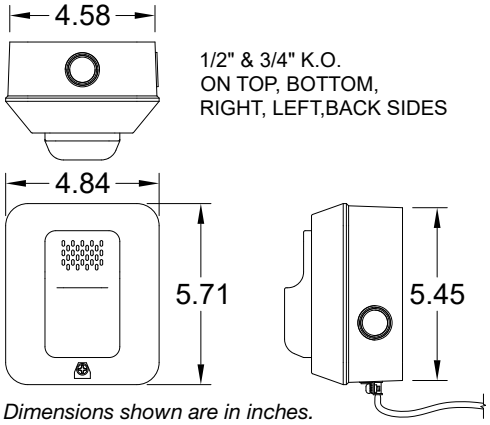

Dimensions shown are in inches.

Fire Extinguisher (if applicable)

The system may be provided with a separate K-Class, 6 liter wet chemical fire extinguisher.

1. Surface mount the extinguisher per NFPA and local code requirements.

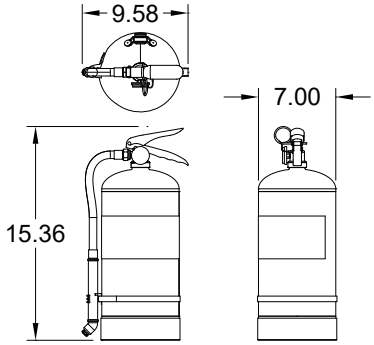

Dimensions shown are in inches.

Electrical Connections

CAUTION
Electrical installation should be performed by a licensed electrician. Shut off power at the main breaker to prevent electrical shock when accessing electrical connections. All field installation and wiring of electrical equipment must be done to meet NEC and local codes.

ATTENTION
Confier les travaux d'installation électrique à un électricien qualifié. Couper l'alimentation électrique au disjoncteur principal pour éviter des chocs lorsqu'il faut avoir accès aux connexions électriques. Toute l'installation en chantier et câblage de l'équipement électrique doivent être effectués conformément au code national de l'électricité et aux codes locaux.

Hood Controls / Lights Power

1. Run 115VAC from 15A breaker through gap between wall plate and hood and run into main input power j-box inside hood.

   It is recommended to route power into single gang j-box on right side of wall bracket as shown:

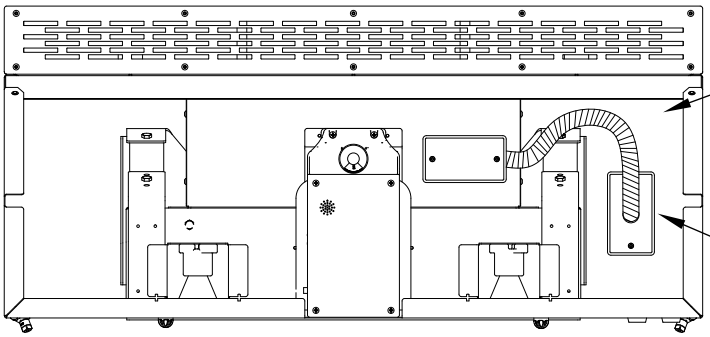

FRONT INSIDE VIEW (FIRE READY HOOD)

1G J-BOX WITH 3/4" CONDUIT (BY OTHERS) FED TO 1G J-BOX INSIDE HOOD (115VAC INPUT POWER FOR HOOD CONTROLS / LIGHTS)

2. Connect 115VAC hot to black wire lead, 115VAC neutral to white wire lead, and ground to green/yellow wire lead within main input power j-box. Max current drawn by hood and hood lights will be 2.5A at 115VAC.

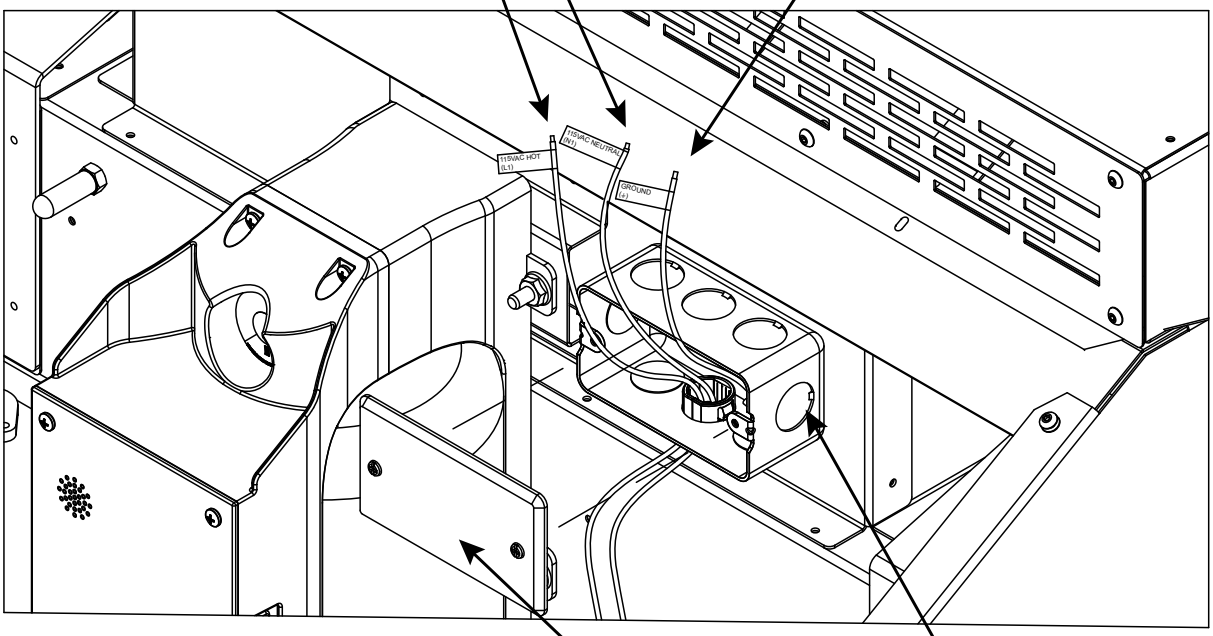

BLACK WIRE (CONNECT TO 115VAC HOT UNDER WIRE NUT)

WHITE WIRE (CONNECT TO 115VAC NEUTRAL UNDER WIRE NUT)

GREEN WIRE (CONNECT TO GROUND UNDER WIRE NUT)

REMOVE COVER ON INPUT POWER J-BOX

BRING POWER WIRING FROM FIELD INTO J-BOX THROUGH KNOCKOUT

Fan Power

Integral Fan – Front Recirculation or Rear Discharge or Top Discharge

Hood will be provided with an integral fan. Fan will be wired by factory.

Range Disconnect

1. If range has power cord, power cord needs to connect back to disconnect box. Depending on the box type, there will either be a NEMA 5-15R receptacle on the side, or receptacle on the face of the box, or the range will need to be hardwired into the box through a bottom knockout.

PLUGGABLE 5-15 DISCONNECT BOX

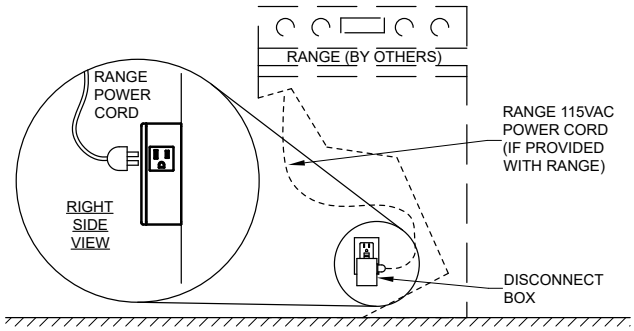

CORDED DISCONNECT BOX

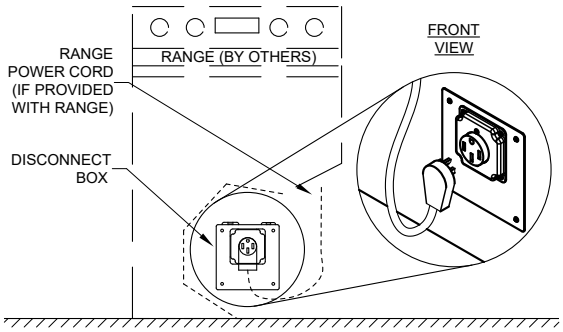

PLUGGABLE 10-50 OR 14-50 DISCONNECT BOX

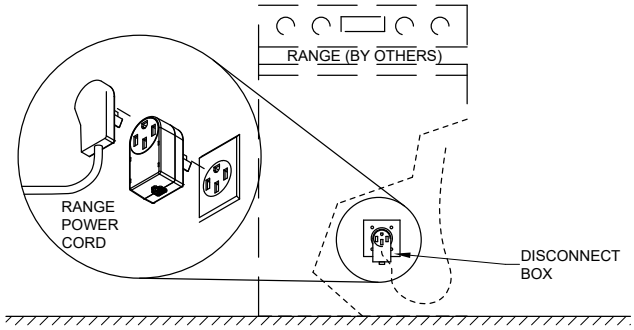

HARDWIRED DISCONNECT BOX

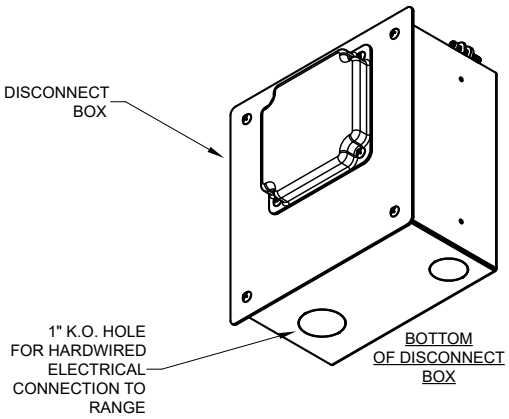

2. If range disconnect includes a gas valve, plug gas valve 5’ cable into disconnect box.

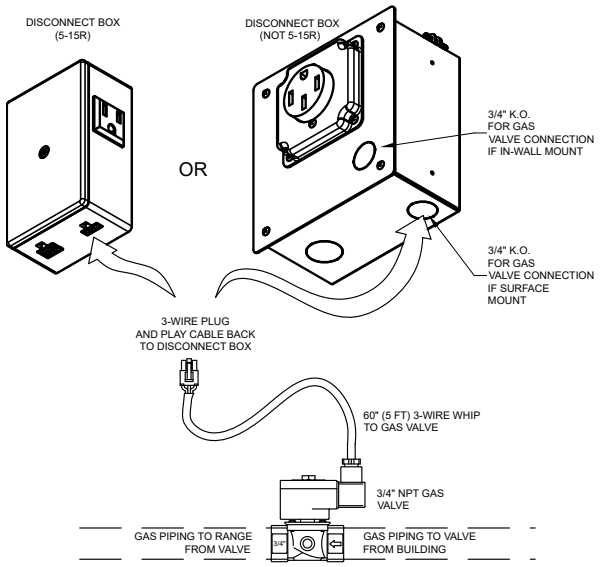

3. Depending on disconnect shut-off type, either plug disconnect box directly into wall outlet, or run 2.5ft cord from disconnect box back to building receptacle, or hardwire the disconnect box to building power.

PLUGGABLE DISCONNECT BOX

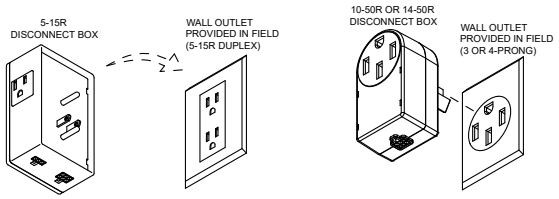

DISCONNECT BOX WITH CORD

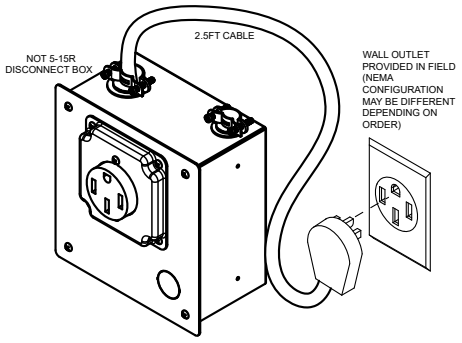

HARDWIRED DISCONNECT BOX

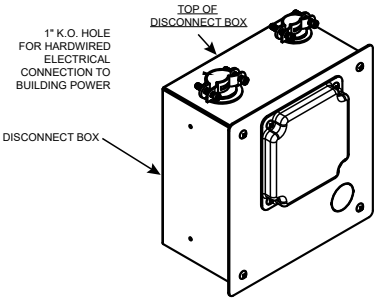

4. There will be (1) 13 ft. 6-wire plug and play cable for controlling the shut off disconnect box. The cable will be shipped loose. Connect this cable in the field at disconnect (to 6 pin connector on box or feed through top-right 3/4” knockout if not pluggable disconnect box) and feed it up to the hood through 3/4” conduit connecting to 6-pin connector on the left side of the U1 control assembly

13FT CONTROL CABLE CONNECTION AT DISCONNECT BOX

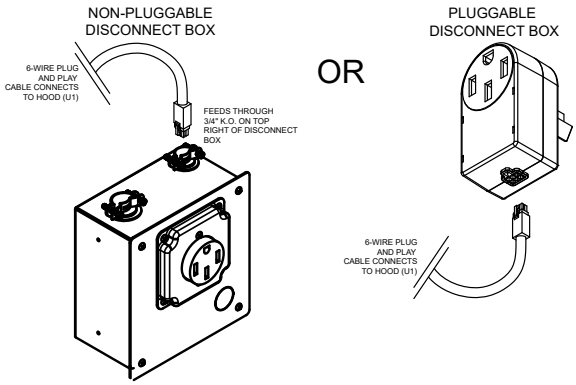

13FT CONTROL CABLE CONNECTION AT HOOD

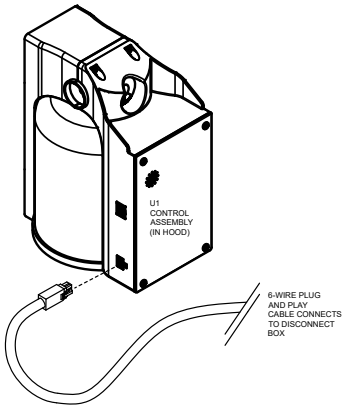

Accessories

Remote Mounted User Interface (if applicable)

If configured for a ship loose touchscreen, there will be a ship loose 10 ft. CAT5 plug and play cable provided to connect the touchscreen back to the U1 control assembly inside the hood. See left-hand side of U1 control assembly for RJ45 port.

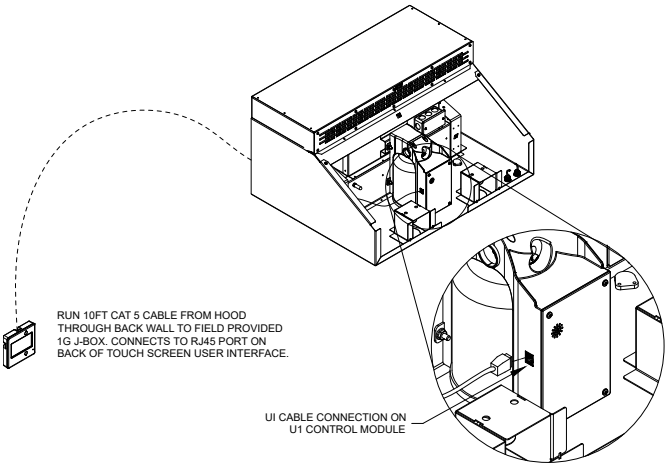

Manual Pull Station (if applicable)

Manual pull station will be provided with a 30 ft. cable. Wire this cable into the station, the run it back to the U1 control assembly inside the hood, landing on “REMOTE PULL +” and “REMOTE PULL -” terminals. Polarity does not matter as this is a switch input.

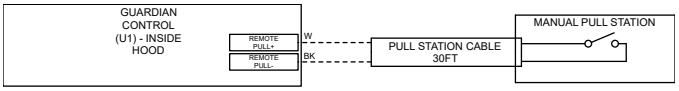

Horn Strobe (if applicable)

There will be one 8 ft. cable with flying leads attached to the horn strobe. Connect back to “STROBE +” and “STR -” terminals on U1 control assembly inside hood.

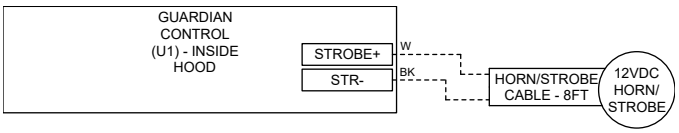

NOTE

Polarity of wires for horn strobe is important. Make sure white wire lands on +, and black wire lands on - on U1 board.

Other External Devices

Supply Fan Run Contacts

Dry, normally-open contact closes when supply fan should run which can be used to interlock the hood with a MUA unit or supply fan (by others) if necessary. Contacts rated up to 1.0A at 125VAC. See screw terminals S1-RA and S1-RB. Contacts will close when exhaust fan is running but hood is not in fire condition.

Supply Fan Speed Control (0-10VDC Out)

0-10VDC signal provided to control a MUA unit (by others) if necessary. Signal will be 2.5VDC when exhaust is in low speed and not in fire, and will be at a max VDC signal when exhaust is in high speed and not in fire, set by the MAU-ADJ dial located on the PCB2 control board within the U1 control assembly. See screw terminals S1-S+ and S1-S-.

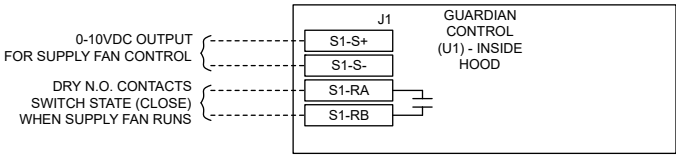

NOTE

Adjusting MAU-ADJ dial counter-clockwise will INCREASE max VDC, and adjusting dial clockwise will DECREASE max VDC.

Fire/Fault Contacts

NOTE

These contacts are intended to be used for notifying building fire alarm or connecting to any other external devices, like shunt trip coils, additional horn and strobes, etc. See chart on page 22 for faults that will activate the trouble (fault) contacts.

A set of SPST dry contacts are provided to indicate a fault (trouble) is present on system, and a set of SPST dry contacts are provided to indicate a fire is present on the system. See table below for details on their action.

Terminals on Guardian U1 Control	During No Faults	During Any Fault (including Fire Alarm)	During Fire Alarm Only
TROUBLE	COM and NO open COM and NC closed	COM and NO closed COM and NC open	COM and NO closed COM and NC open
FIRE DETECT	COM and NO open COM and NC closed	COM and NO open COM and NC closed	COM and NO closed COM and NC open

NOTE

Fault (trouble) and Fire Detect contacts rated for max 0.5A at 125VAC.

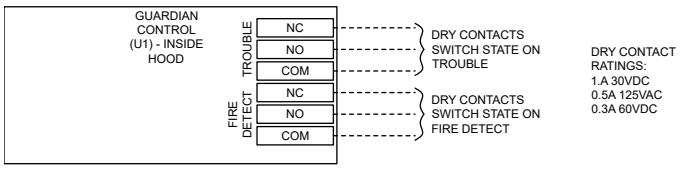

Fan Calibration

NOTE

For NFPA 101 compliance (life safety code), 500 design CFM at max speed is required. For non-NFPA 101 compliance configurations, 500 CFM at max speed is still recommended, but can be lowered if needed by adjusting the HOOD FAN-ADJ dial on the PCB2 board within the U1 control assembly.

NOTE

Adjusting HOOD FAN-ADJ dial counter-clockwise will INCREASE max VDC, and adjusting dial clockwise will DECREASE max VDC.

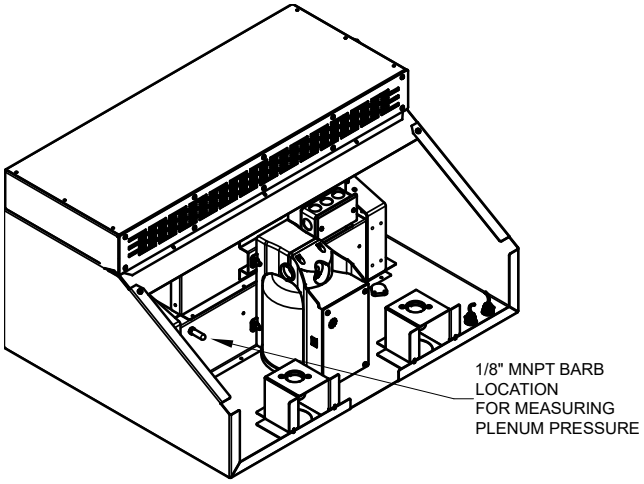

Turn the fan on, making sure the fan is running at max speed (LED on fan button should be green). Connect one end of a manometer to the plenum pressure port (1/8-inch MNPT barb located inside the hood). Adjust the max speed as necessary (HOOD FAN-ADJ dial) to match the pressure with the corresponding value in the chart below.

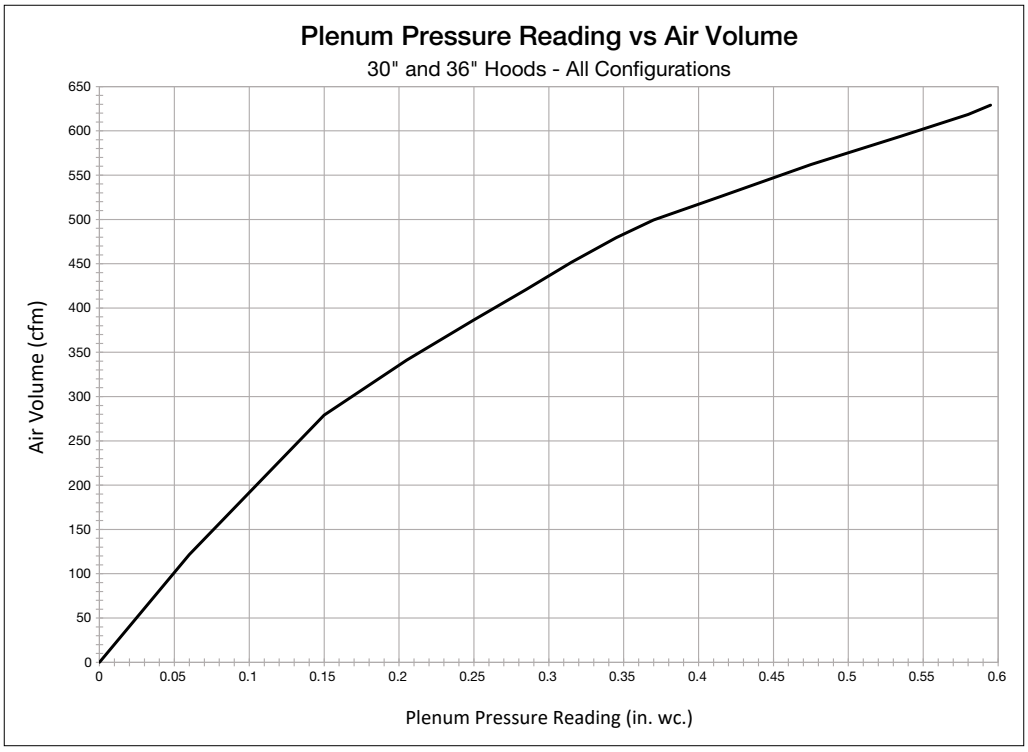

Dials on U1 control assembly for adjusting max VDC for exhaust and supply.

NOTE

System must be armed before operating per Arming the System section on this page.

Unit Pre-Suppression Functions

The XRRB functions as a standard ventilation range hood with the added capability to suppress stove top fires.

Designed to use over a standard 30 and 36-inch domestic range, the system relies on input from a multiple sensors to control the fan and shutoff power to the stove when the temperature reaches preset points.

The fans and lights can be turned on and off using either the fan and light push buttons, or if equipped, the remote touchscreen user interface. The range can also be unlocked via the user interface. If provided with the user interface, a password is required to unlock (turn on) the range. The range will be automatically locked again after a time limit (default 2 hours) if the hood system was configured with a user interface. To comply with NFPA 101, this time limit cannot exceed 2 hours.

Upon reset/startup of the system, fan and light push buttons will illuminate yellow for approximately 12 seconds. Fan and hood lights cannot be turned on/off while resetting or starting up.

FAN PUSH BUTTON

LIGHT PUSH BUTTON

To turn on lights, press light button once. Lights should turn on and LED indicator on light button should illuminate green. Pressing light button again will shut the lights off. To turn on fans, press fan button once. Exhaust will ramp to low speed and LED indicator on fan button will illuminate blue. Pressing fan button a second time will ramp exhaust fan to high speed and LED indicator on fan button will illuminate green. Pressing fan button a third time will turn the exhaust fan off.

If the temperature reaches the low speed setpoint (default 115°F), the hood turns the fan on (if not already on) to the low fan speed. Fan can still be ramped to high speed via pressing fan button again, but fan cannot be shut off if temperature has exceeded this cooking detection setpoint.

NOTE

If AHJ wants to verify hood operation by heating up temp sensors to see if fans turn on, do NOT apply flame directly to sensor as this can cause damage to sensor and replacements will not be offered under warranty. It is preferred to either turn burner(s) on stove on, or temporarily apply flame no closer than 6” from either sensor until fans turn on automatically.

If the temperature continues to climb, upon the temperature reaching the high speed setpoint (default 150°F), the hood will force the fan (if not already at high speed) to high speed. The fan cannot be shut off or reduced to low speed via fan button if the hood temperature exceeds the high speed setpoint.

If temperature continues to climb, upon reaching the high temperature setpoint (230ºF), the hood will keep fans at high speed and also shut off and lock out the appliance disconnect. After reaching high temperature setpoint and entering high temp mode, after temps are brought back down to safe levels the system will require a reset (see “Fire System Detect Mode” section on page 22).

If the temperature continues to climb, upon reaching approximately 250°F, the fire suppression system will discharge, dispersing wet chemical on top of the appliance and suppress the fire below. During a fire condition, the fire detect contacts will switch state.

Arming the System

NOTE

System arming is typically performed by factory authorized fire equipment distributor during startup. Do not tamper with the fire suppression system after the initial startup unless authorized to do so.

To arm the range hood, do the following:

1. After hood and hood components are installed but before turning power on for hood and disconnect box, remove the front cover of the hood then remove front cover of U1 control module (via 4 screws in corners). Pull pin should still be installed inside tank. Install 9V battery into CP1 circuit board. Module will chirp 3 times indicating power is not on to disconnect box. Replace the cover on the U1 control module.
2. Turn power on to circuits feeding hood and disconnect box. Attempt a system reset by press and release of the “RESET” button located on the U1 control assembly.

FRONT VIEW
U1 CONTROL
ASSEMBLY
(INSIDE HOOD)

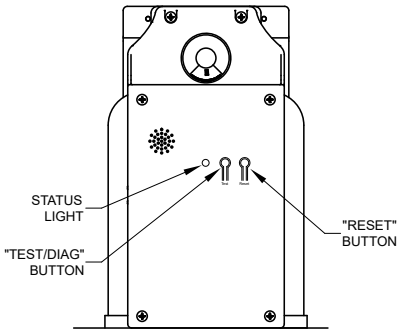

3. After pressing reset, U1 control will check system for faults. This system check process takes approximately 12 seconds. If no faults are present, range will unlock (or, if provided with a remote mounted UI be allowed to be unlocked via password) and fan and lights are able to be controlled via fan and light buttons. System status light will flash green once every 5 seconds indicating system is okay.
4. If faults are present on the system, U1 control will chirp a number of times indicating a specific fault is present. Consult diagnostic failure codes (page 22) and troubleshooting section (page 29-30) for more information on how to correct.
5. Once there are no faults on the system and system successfully resets, range should now be able to be unlocked (if locked via the user interface) and powered on. Confirm the range, hood lights, and hood fans are all operational.
6. Once operation is confirmed, turn off power to hood and shut-off disconnect box, and remove 4 screws holding tank inside the assembly. Carefully pull the pin from the fire tank and discard. Replace the front of the tank assembly and re-attach the 4 screws, then turn power back on to the hood and disconnect box.
7. Place cover back onto the front of the hood. Hood should now be armed and ready for operation.

IMPORTANT

It is important that pull pin is removed from tank while arming the system. Without removing the pull pin, the system will never be able to expel wet chemical on the fire while in fire detect mode if a fire occurs.

Fire Prevention Tips

If you must leave the kitchen when cooking food, turn the burner off or remove the pan from the burner until you return.

In case of a grease fire:

NEVER attempt to move a pan of cooking grease that is already on fire from the kitchen range.

NEVER attempt to extinguish a grease fire with water. Instead, alert the other occupants and evacuate. Let the fire suppression system installed in the hood extinguish the range top fire. Wait at least 30 minutes after a cooking fire has been extinguished before approaching your range.

Service and Maintenance

Accessing Internal Components

NOTE

- All service on the fire suppression system should be performed by authorized equipment distributor.
- Do not remove the front cover of the hood and service while cooking on the range below.
- Always shut off circuit feeding hood and shut-off disconnect box before removing the front cover of hood

1. Remove two screws holding front face of hood shell.

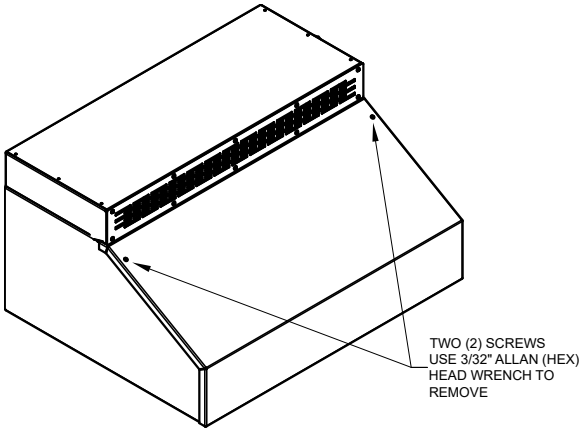

2. Entire front cover can then be removed from the hood by firmly pulling straight out.
3. When done servicing, replace front cover by sliding it back onto the hood and securing screws.

Fire System Diagnostics

Pressing, then releasing the "TEST/DIAG" button on the fire system control board will start a diagnostic test, putting the system into "test mode". This is a way to verify that the entire system is working properly and the fuel shutoff function is working without discharging the fire suppression wet chemical.

Upon entering test mode and failing any particular test, a sequence of audible chirps will sound which represent a failure code (as well as a quick flash of the red indicator on the fire suppression control board). Upon failing any part of the test, the control board will revert to a slowly flashing red status light indicator (0.5 seconds on, 0.5 seconds off, repeated). If all tests pass, the unit will enter a shut off sequence. (See Fire System Shut Off Sequence section).

Audible Diagnostic Failure Codes

Number of Chirps	Corresponding Fire System Component Issue
1	(Temp) Sensor 1 Fault
2	(Temp) Sensor 2 Fault
3	Low Battery
4	Actuator Fault
5	(Not Assigned)
6	Pull Station Fault
7	AC Power Fault

Upon any diagnostic failure, the fire ready fan and light push buttons will also flash red (0.5 seconds on, 0.5 seconds off, repeated).

Fire System Shut Off Sequence

FIre system shut off sequence is initiated when pressing TEST/DIAG button and no faults are present. Pressing RESET will exit fire system shut off sequence and enter fire detect mode (normal operation).

A shut off sequence will cause:

1. Status LED flashes red (0.5 seconds on, 0.5 seconds off, repeated)
2. Audible alarm (250msec on, 250msec off, repeated)
3. Disconnect fuel from range
4. Exhaust fan ramps to low speed. Supply fan output turns off.
5. Hood lights turn off

Fire System Detect Mode (Normal Operation)

Upon pressing the "RESET" button on the fire suppression control board (and successfully passing all diagnostic tests), the U1 control assembly will enter into fire detect mode.

During fire detect mode the fire suppression control board will silently run all six diagnostic tests. If at any time any one of these tests fails, the U1 control module will enter fire system fault mode (see "Fire System Fault Mode" section on this page).

During fire-detect mode, the main unit monitors two sensors to detect 250°F indicating a fire. If a fire is indicated, the fire system control board will enter fire system alarm mode (see page 23, "Fire System Alarm Mode").

NOTE

Powering the fire suppression control board by inserting the battery OR pressing and releasing the "RESET" button will cause the same action.

Fire System Fault Mode

The U1 control assembly will enter fault mode upon a diagnostic test failing, or if any monitored fault occurs while in fire detect mode. Fault mode will cause:

1. Status LED flashes red (0.5 seconds on, 0.5 seconds off, repeated)
2. Audible alarm on for 3 seconds, then chirps once per minute
3. Disconnect fuel from range
4. Exhaust, supply and hood lights will all shut off

While in fault mode, after correcting the issue user must press "RESET" button on the U1 control assembly to reset the system and enter back into "Fire System Detect Mode".

Fire System High Temp Mode

The U1 control assembly will enter high temp mode upon temperature exceeding 230°F while in fire detect mode. High temp mode will cause:

1. Status LED flashes red (0.5 seconds on, 0.5 seconds off, repeated)
2. Audible alarm on for 3 seconds, then chirps once per minute
3. Disconnect fuel from range
4. Exhaust fan forced to high speed (if not already). Supply fan output on and at high speed (if not already). Hood lights will continue with whatever state they were in prior to the fault.

Upon entering high temp mode, fan and light push buttons on hood will illuminate solid red. In order to exit high temp mode, a reset will be required after reducing temps under the hood, similar to exiting the fault mode after correcting the cause of the fault. See "Fire System Detect Mode" section on this page for details on how to reset the system.

If temps continue to rise and reach 250°F, system will enter Fire System Alarm Mode.

Fire System Alarm Mode

The U1 control assembly will enter fire system alarm mode upon temperature exceeding 250°F while in fire detect mode.

The fire alarm sequence causes:

1. Status LED flashes red (0.5 seconds on, 0.5 seconds off, repeated)
2. Audible alarm (250msec on, 250msec off, repeated)
3. Fire system (wet chemical) discharged/actuated
4. Disconnect fuel from range (if not already shut off)
5. Exhaust fan ramps to low speed. Supply fan output turns off.

NOTE

The fire alarm sequence can only occur when the fire suppression control board is running in fire detect mode.

NOTE

To mute the audible alarm, press "RESET" button on U1 control module.

After Actuation

NOTE

A complete system inspection and servicing must be done immediately following a kitchen range top fire. Consult an authorized fire equipment company for service or proper procedure.

NOTE

All service on the fire suppression system after actuation should be performed by authorized equipment distributor.

CAUTION

Before replacing the wet chemical, the tank, release valve assembly, it is recommended to wear approved type of eye protection and rubber gloves.

1. Shut off power to hood and range disconnect.
2. Clean up all wet chemical using soap and warm water with a sponge. Do not use vacuum cleaner.
3. Remove the battery from the fire suppression control board.
4. Disconnect the tank cylinder actuator wire connections from the U1 control module. Remove the actuator from the tank.
5. Remove the extinguisher cylinder assembly from the U1 control module.
6. Unscrew and remove the extinguisher cylinder manifold. Pour out any leftover wet chemical in the cylinder.
7. Refill extinguisher cylinder with 4.9 lbs. of wet chemical agent (part of recharge kit).
8. Flush out existing distribution assembly with water to remove residual wet chemical and blow dry.
9. Replace the extinguisher cylinder manifold O-ring, spring, valve stem, and actuator (part of recharge kit, PN: 1075252).
10. Connect a nitrogen supply line to the ¼ inch male quick connect fitting and pressurize to 100 PSI.

CAUTION

Do not use extinguisher cylinder gauge to determine when the intended charge pressure has been reached.

AVERTISSEMENT

Ne pas utiliser le manomètre du cylindre extincteur pour déterminer le moment où a été atteint la pression de charge prévue.

11. Reinstall the extinguisher cylinder assembly in the U1 control module.
12. Refer to the "Arming the System" section on page 20 to reactivate the system.

NOTE

Upon performing the fire system diagnostic test, additional components may need to be replaced as a result of the high temperatures and flames that occurred during the fire. Replace these parts as necessary (see "Parts" on page 31).

Performing Fire Test

NOTE

Fire "puff" test may be necessary or required per local AHJ. This test should only be performed by factory authorized fire equipment distributor after startup.

Before performing fire "puff" test, make sure fire test cylinder is installed. Test cylinder is PN: 1075250. It needs to be charged with nitrogen in the field before being installed in the hood and performing the fire test.

Performing fire test can be done two different ways:

1. If provided with manual pull station, pull lever on pull station.
2. If not provided with manual pull station, use Fire Ready Test Tool (PN: 1075251). Plug this test tool into REMOTE PULL port on the fire suppression control board. Pressing the red button on the Fire Ready Test Tool will initiate a fire condition, similar to the manual pull station.

WARNING

Do NOT heat up temperature sensors with heat gun to perform a fire test, as flame/heat applied directly to temperature sensors would run the risk destroying/damaging the temperature sensors, and replacements in this case would not be covered under warranty.

User Interface (UI) Operation – End User

General End User Operation

User interface (UI) consists of a capacitive full-color touchscreen. For general operation, it's main purpose is to turn on and off hood ventilation and hood lights, and to unlock/lock the range. It's also used by factory authorized servicers to adjust settings and diagnose problems (if necessary) using a password protected system settings navigation.

NOTE

Without the touchscreen user interface, the range will automatically unlock when entering fire detect mode (normal operation).

Only one (1) user interface can be connected to the U1 control assembly, and one user interface cannot be connected/shared between multiple fire ready hoods.

Example of UI Main Screen

1) Fans

- Pressing Fans button once will turn on fans first to low speed. Fans icon on screen will turn orange, and show "LOW" and "ON". Exhaust fan will ramp to low speed, supply fan dry contact (S1-RA/S1-RB on U1 assembly) will close, and supply speed reference will increase to 2.5VDC.
- Pressing Fans button a second time will turn fans to high speed. Fans icon on screen will remain orange and show "HIGH" and "ON". Exhaust fan will ramp to high speed, supply fan dry contact will remain closed, and supply speed reference will increase to max VDC value based on MAU-ADJ dial setting.
- Pressing Fans button a third time will turn off all fans. Fans icon will no longer be orange and show "OFF". Exhaust fan will ramp to stop, supply dry contact will open, and supply speed reference will decrease to 0VDC.
- If fans are ever attempted to be shut off via UI when any hood temp is above 115°F, fans will continue to run and the following screen will appear momentarily:

- If temps reach 230°F, the following screen will appear and stay on the display after locking the disconnect (Fire System High Temp Mode).

- If temps reach 250°F, the system will enter Fire System Alarm Mode and the screen will appear and stay in the display.

2) Lights

- Pressing Lights button will turn on the hood lights. Lights icon on screen will turn orange and show "ON".
- Pressing Lights button again will turn off the hood lights. Lights icon on screen will no longer be orange and show "OFF".

3) Unlock Range

- Pressing Unlock Range button will unlock range. If Range Unlock Password Enable is Enabled, the screen may prompt user to enter a password (NFPA 101 Life Safety Code requirement).

  Example of Password Entry Screen

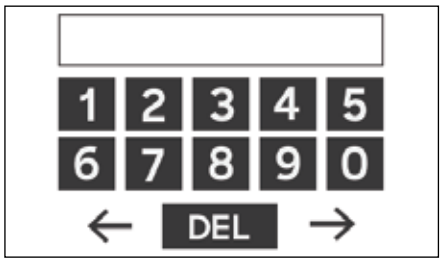

- If password is not entered correctly, text box will remain red until it is entered correctly.

  Example of Password Incorrectly Entered

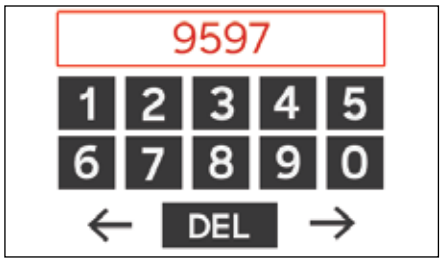

- Default Range Unlock password will be set to 1000. This password can be changed within General Settings.
- Before screen is unlocked, an additional screen will appear warning user that range is about to be energized, and to make sure no burners are turned on and stove is safe to turn on.

  Example of Pre-energize Range Screen

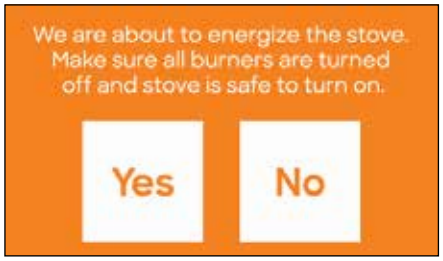

- If Auto Range Off Timer is set to a value (not Disabled) within the General Settings, the Range countdown timer will appear and start. Once it expires, the range will automatically lock again. Unlocking it will require re-pressing the Unlock Range button, and re-entering the password.

4) Settings

- Pressing the settings buttons will allow access into system settings.
- A password will need to be entered first before entering system settings.

Faults

If a fault is present on the system:

- A specific fault message will appear on the screen
- See page 22 for faults (failure code list)

Example of Sensor 1 Fault Screen

For troubleshooting faults, consult Troubleshooting section starting on page 29.

To get back to home screen, fault must be fixed then system must be reset (reset button on U1 control assembly) to once again view the main screen.

Settings Navigation – Factory Authorized Servicer

NOTE

Entering into system settings and adjusting settings should only be done by factory authorized servicer or with direction by the factory. This should not be done by day-to-day kitchen operators, unless guided by factory.

NOTE

It is suggested that after changing any parameters in the system settings, cycle power to the control panel before operating.

To enter into the systems settings, press Settings button and enter Service Password (default 1000). Once password is entered and displayed correctly on the screen, press the arrow pointing to the right.

Example of Password Prompt Screen

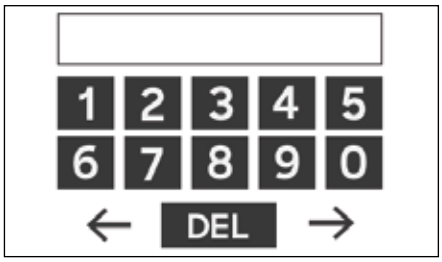

Settings are broken into these 2 sub-menus.

1) Diagnostics – Submenu to assist with diagnosing problems, such as viewing real time temp sensor values.
2) General Settings – Includes general settings such as changing passwords or adjusting Auto Range Off timer.

Example of Changing a Setting

1) For this example, we want to change Auto Range Off Timer from 120 minutes to 60 minutes. After pressing Settings button and successfully entering the password, we enter into the system settings where “Diagnostics” is the first menu to show on the screen:

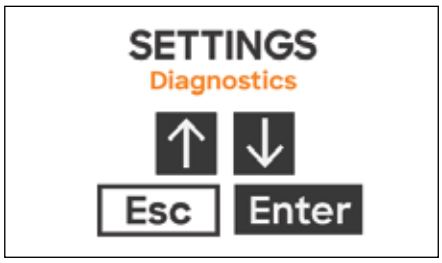

2) Scroll up/down to “General Settings” and press Enter button to enter into General Settings.

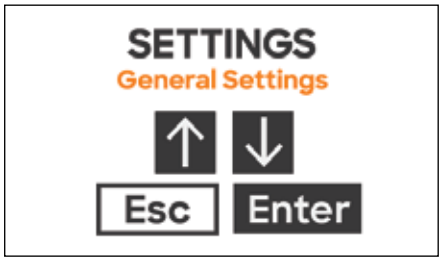

3) Press up/down until reaching “Auto Range Off Timer”, and press Enter button.

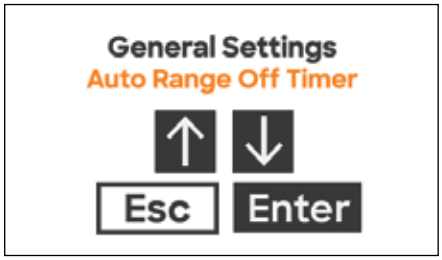

4) Adjust value from 120 min down to 60 min using down arrow, then press Enter to store value.

If successful, the screen will show “Saved”.

Settings Navigation – Factory Authorized Servicer

Diagnostics

Software Version

- Provides software version of touchscreen currently loaded onto the UI

Fan Status

- Displays the current status (OFF, ON – LOW, or ON-HIGH) and Fan Speed in RPMs of the exhaust fan

Temp Sensors

- Able to view current temp sensors values inside the hood
- Hood temp sensors should be called out as TSx (x being the sensor number, either 1 or 2)

General Settings

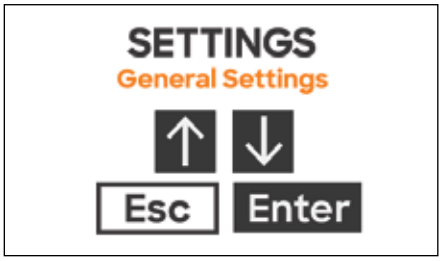

Range Unlock Password Enable – *Default set to "Enabled"*

- Select from either "Enabled" or "Disabled"
- If set to "Enabled", a Range Unlock Password will be required to be entered successfully before the range can be unlocked.

NOTE
Range Unlock Password Enable must be set to a "Enabled" to comply with NFPA 101 Life Safety Code.

Service Password – *Default set to "1000"*

- Select a whole number from 0000 to 9999, one digit at a time starting from the far left
- This sets up the password to access settings from the user interface.

Range Unlock Password – *Default set to "1000"*

- Select a whole number from 0000 to 9999, one digit at a time starting from the far left
- This sets up the password to be able to unlock the range, if Range Unlock Password Enable is set to "Enabled".

Auto Range Off Timer – *Default set to 120 minutes*

- Select a whole number from 0 (disabled) up to 999 minutes, one digit at a time starting from the far left
- When timer expires, the range will automatically lock

NOTE
Auto Range Off Timer must be set to a value between and including 1 and 120 minutes to comply with NFPA 101 Life Safety Code.

Hood Integration – *Default set to "Yes"*

- Select from either "No" or "Yes"
- If set to "Yes", UI will include Fans and Lights buttons on main screen. If set to "No", the UI will hide the Fans and Lights buttons from the main screen.

Routine Maintenance

	Monthly	Annually	Every 10 Years
Cleaning	Yes	Yes	—
Suppression Nozzles	Inspect	Inspect	—
Temperature Sensors	Inspect	Inspect	—
Extinguisher Tank	Inspect	Recertify	Replace

To clean hood, wipe grease from exposed metal surfaces on the hood interior using a clean, dry cloth. Stainless steel hood exterior surfaces should be cleaned with a mild detergent then polished with a high grade stainless steel polish to preserve the original luster.

Routinely remove metal mesh grease filter from the hood and clean using hot water and mild detergent.

NOTE

Never use abrasive cleaners or chemicals on hood surfaces. Never use chlorine based cleaners or iron wool pads to clean the hood. They may scratch or mar the material, allowing pitting and rust to form. Always rub with the grain of the stainless when cleaning.

Replace hood lights, sensors, and other components as necessary.

On front recirculation models, replace the charcoal filter routinely (as needed) to help catch cooking odor molecules when recirculating air back into the space.

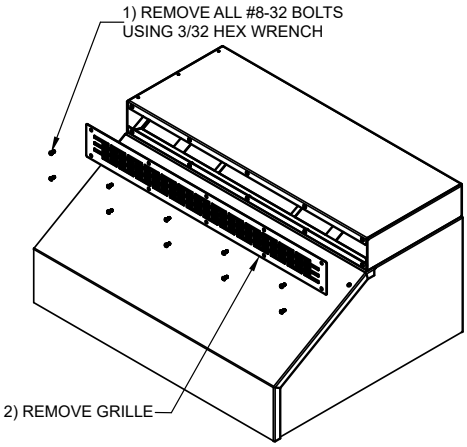

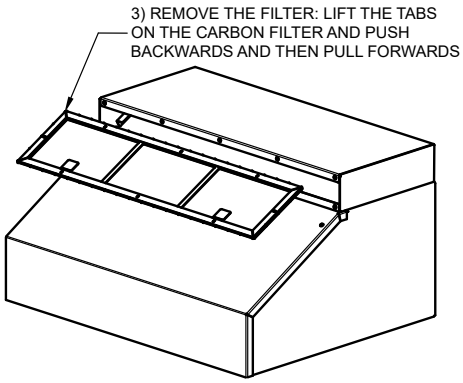

Troubleshooting

Problem: Fan won't turn on	
Fan not turned on by push buttons or user interface	Press fan push button once to go to low speed (button will be blue), and a second time for high speed (button will be green).
No hood/light voltage to U1	Check voltage from H1 to N1 inside U1 control with voltmeter. For proper operation, voltage should be 115VAC 50-60Hz.
Fuse blown	Remove and test all 0.5A fuses located inside appliance disconnect box and inside U1 control assembly. Remove and test 3.5A fuse located inside U1 control assembly. Confirm all fuses have continuity. Replace if blown.
Problem: Hood is spilling smoke	
Fan is not on	Turn fan on using fan button or user interface. Increase fan to high speed if currently operating at low speed by pressing fan button until fan button is illuminated green.
Hood not centered above range	Center range below hood
Fan is not calibrated	See "Fan Calibration", page 19
Appliance is not correct size/type for fire ready hood	Appliance must be residential range type and either 30 or 36 inches long (for 30 or 36 inch long hood configurations)
Problem: Range doesn't work	
Range not unlocked by user interface	Press range / lock icon button on user interface (and enter password, if necessary) to unlock range
Electric range disconnect not receiving power	Reset breaker for electric range, make sure electric range disconnect is plugged into outlet
Gas range breaker feeding disconnect box tripped/off	Reset breaker for gas range, make sure gas range disconnect is plugged into outlet
Fire suppression control board fault	Correct control board fault and reset board (see Fire System Diagnostics, page 22)
Electric/gas disconnect box not wired	Confirm both 10 ft. plug and play control cables are connected between hood and disconnect assembly box
No gas flowing to gas range	Make sure all manual gas valves feeding gas line are on, confirm gas valve is receiving 24VAC voltage between black and white wires
Problem: Touchscreen user interface blank	
Touchscreen backlight time expired	After 5 minutes, the back light on the touchscreen will dim. Press anywhere on the screen to brighten the screen again.
Disconnect not sending power up to U1 Control Assembly	Make sure disconnect is plugged in and powered. Make sure 13-ft. disconnect cable is correctly connected from disconnect up to U1 control assembly in hood. Check fuses inside disconnect box for any missing or blown fuses.
Touchscreen is not connected correctly	Make one end of 10 ft. cable provided is plugged into U1 control assembly and other end is landed on back of touchscreen. Check pin-outs on cable and look for cable damage, replace cable if necessary.
Problem: Hood lights don't work	
Hood lights not on/illuminated	Turn lights on using light button or user interface.
Blown fuse	Remove and test lights/fan 3.5A fuse inside U1 control assembly. Confirm fuse has continuity. Replace if blown.
Bad hood light bulbs	Replace bulbs
Problem: Range randomly shut off	
If provided with remote UI touchscreen, per NFPA 101 requirements, after the range is unlocked it will automatically shut off in 2 hours (default).	Working per design. Unlock range again if more cooking is necessary.

Troubleshooting

Problem: Horn strobe not working	
Horn strobe not connected	Check wiring for horn strobe (see wiring diagram)
No fire detected	Horn strobe will only sound upon a fire detected
Problem: Interlocked supply fan not working	
Incorrect wiring	Dry, supply fan contacts provided on 0-10VDC output provided on S1-S+ and S1-S- terminals. This set of contacts will output a 0-10VDC signal when supply should be running. This contact will close when exhaust is on and the system is not in fire.
Problem: Sensor Fault	
Not connected	Make sure sensor 1 is connected to SENSOR1+ and SENSOR1- on U1, and sensor 2 is connected to SENSOR2+ and SENSOR2- on U1.
Bad sensor	Disconnect each temp sensor and check resistance. Each sensor should read around 108ohms at room temperature.
Problem: Low Battery Fault	
9V battery in U1 assembly is low	Change 9V battery and reset system
Problem: Actuator Fault	
Actuator not connected	Check ACTUATOR+ and ACTUATOR- on U1 and make sure actuator is connected to these terminals.
Actuator faulty	A good actuator will read around 2.7ohms. If open or high resistance, replace the actuator.
Problem: Manual Pull Station Fault	
Pull station is pulled or faulty	Reset pull station and reset system. Pull station should read open in normal operation, and close when pulled. Test for continuity with multi-meter.
Problem: AC Power Fault	
Disconnect not powered or connected	Make sure disconnect is receiving power, and 13ft disconnect cable is plugged in and connected to U1 control assembly.
Blown fuse in disconnect	Remove and test all 0.5A fuses located inside appliance disconnect box. Confirm all fuses have continuity. Replace if blown (PN: 388660).

Parts List

Part Number	Description
1075241	Distribution Assembly with Hose & Nozzle & Nozzle Bracket (System requires 2)
1075242	Sensor assembly (System requires 2)
1075240	Charged Cylinder Assembly
1075239	Main CPU/Hood Control PCBA with Housing
1075250	Test Cylinder (must be charged with nitrogen in the field)
1075252	Recharge Kit (with agent, spring, o-ring, and valve stem)
1075243	13ft Interconnect Cable (6-Wire Hood to Disconnect Box)
1075259	Manual Pull Station (with 30 ft. Cable)
1075261	Manual Pull Station Break Rods (Pack of 12)
1075262	Manual Pull Station Keys (Pack of 5)
1075256	Horn Strobe (with 8 ft. Cable with Flying Leads)
1075245	120VAC Gas Valve ONLY
1051901	Grease Filter 12 x 12 x 2-inch Baffle Style
1051898	Charcoal Filter 30 x 6.5 x 0.125-inch
1051899	Charcoal Filter 36 x 6.5 x 0.125-inch
1051902	Integral Fan Replacement
1075258	User Interface 10 ft. Plug and Play Cable
481989	K-Class Fire Extinguisher
WC-10X3	Wall Cap
1075257	User Interface (Touchscreen)
1075251	Fire Ready Test Tool
388660	0.5A 229.500MXP Fuse (For overcurrent protection on main PCB1 - Qty. 2, and inside appliance disconnect box - Qty. 3)
388661	3.5A 22903.5MXP Fuse (For overcurrent protection for lights/fan circuits on PCB2 - Qty. 1)

U1 Control Assembly Fastener Detail

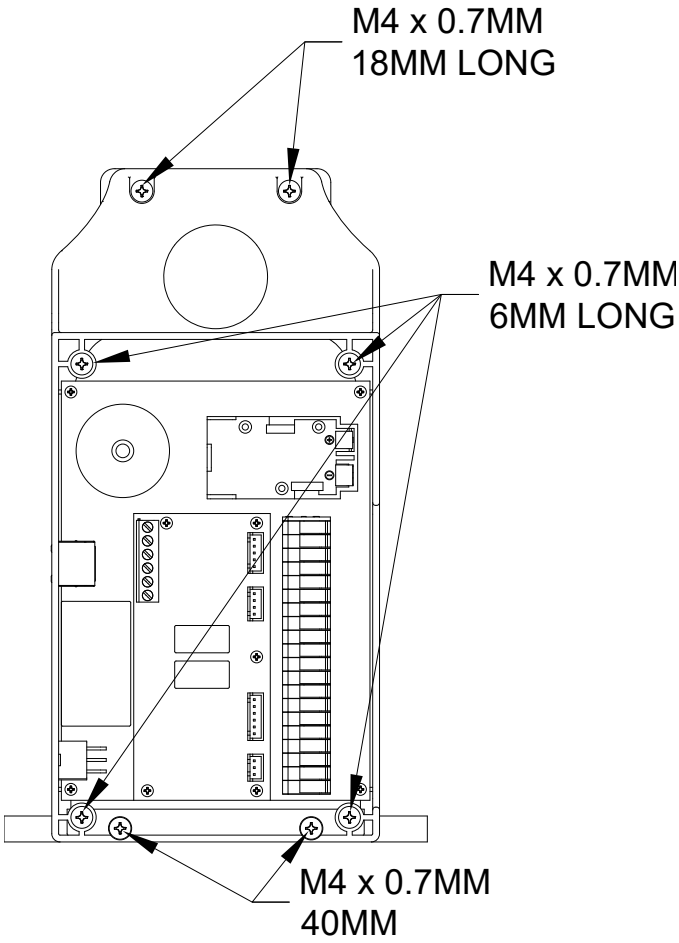

Our Commitment

As a result of our commitment to continuous improvement, Accurex reserves the right to change specifications without notice.

Product warranties can be found online at accurex.com, either on the specific product page or in the Warranty section of the website at Accurex.com/Resources/Warranty.

ACCUREX®

P.O. Box 410 Schofield, WI 54476
Phone: 800.333.1400 • Fax: 715.241.6191
Parts: 800.355.5354 • accurex.com

 © 2026 Accurex, LLC