ACCUREX®

Document 470399
Kitchen Hoods
Type I and Type II

Installation, Operation and Maintenance Manual

Please read and save these instructions for future reference. Read carefully before attempting to assemble, install, operate or maintain the product described. Protect yourself and others by observing all safety information. Failure to comply with these instructions will result in voiding of the product warranty and may result in personal injury and/or property damage.

Type I

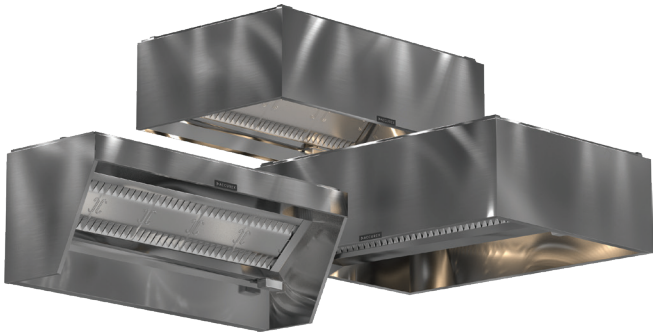

Type II

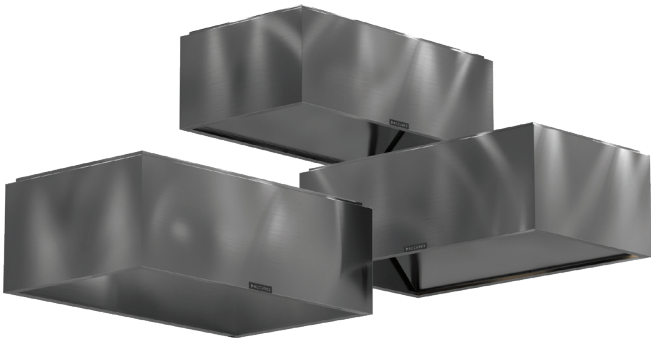

General Safety Information

Only qualified personnel should install this system. Personnel should have a clear understanding of these instructions and all applicable local and national building and fire codes. Personnel should be aware of general safety precautions. SMACNA guidelines should be followed for hanging and supporting the hood. If more information is needed, contact a licensed professional engineer before moving forward.

DANGER

Always disconnect power before working on or near any electrical components in the hood. Lock and tag the disconnect switch or breaker to prevent accidental power up.

NOTE

Follow all local electrical and safety codes, as well as the National Electrical Code (NEC), and the latest edition of the National Fire Protection Agency Standard for Ventilation Control and Fire Protection of Commercial Cooking Operations (NFPA 96). Follow the Canadian Electrical Code (CEC) and ULC-S650 if installing this product in Canada.

NOTE

All information with regards to the self-cleaning Auto Scrubber hoods and controls can be found in the Auto Scrubber hood and Auto Scrubber control panel installation, operation and maintenance manuals. These are available on the Accurex website, www.accurex.com.

Receiving

Upon receiving the product, check to ensure all items are accounted for by referencing the delivery receipt or packing list. Inspect each crate or carton for shipping damage before accepting delivery. Alert the carrier of any damage detected. The customer will make a notation of damage (or shortage of items) on the delivery receipt and all copies of the bill of lading which is countersigned by the delivering carrier. If damaged, immediately contact your Accurex Representative. Any physical damage to the unit after acceptance is not the responsibility of Accurex, LLC.

Unpacking

Verify that all required parts and the correct quantity of each item have been received. If any items are missing, report shortages to your local representative to arrange for obtaining missing parts. Sometimes it is not possible that all items for the unit be shipped together due to availability of transportation and truck space. Confirmation of shipment(s) must be limited to only items on the bill of lading. Filters are shipped on a separate skid in their original packaging. Do not remove factory packaging or install filters until just prior to commissioning. Remove all other shipping/packing materials.

Handling

Units are to be rigged and moved by the lifting brackets provided or by the skid when a forklift is used. Location of brackets varies by model and size. Handle in such a manner as to keep from scratching or denting. Damaged finish may reduce ability of unit to resist corrosion.

Storage

Units are protected against damage during shipment. If the unit cannot be installed and operated immediately, precautions need to be taken to prevent deterioration of the unit during storage. The user assumes responsibility of the unit and accessories while in storage. The manufacturer will not be responsible for damage during storage.

The ideal environment for storage of the hood and accessories is indoors, above grade in a clean, dry atmosphere that is sealed from the elements. While in storage, inspect equipment routinely. If any moisture, dirt or other accumulations are found on the hood or any of the parts, the source should be located and eliminated.

Removing from Storage

As equipment is removed from storage to be installed in their final location, it should be protected and maintained as outlined in the Handling section above.

Table of Contents

Receiving, Unpacking, Handling and Storage 2
Removing from Storage 2
Canopy Hood Weights 3
Proximity Hood Weights 4
Crossover Hood Weights 4
Supply Plenum
Weights and Dimensions 4
Prior to Installation 5
Wall or Single Island Canopy Hoods
Hood Installation Overview 5-6
Filler Panel Installation 7
Clearance Reduction Methods
Top, Back, Front and End 7-8
Installing Duct Collars
Exhaust Duct Collars 8
Installing the Back Supply Plenum
Install the Supply Duct Collar 9
Hang the Plenum 9
Ductwork 9
Continuous Capture Plenum Hoods 9
Installing Front/Side External Supply Plenums
Using the Uni-strut 10
Using Hanger Brackets and Threaded Rod 10
Installing the Supply Duct Collar to the Plenum 10
Installing Backsplash Panels
Flat Backsplash Panels 11
Insulated Backsplash Panels 11
Installing End Skirts 12
Electrical Connections
Hood Lights / Fan and/or Thermal (Tempering) 12
Keypads or Touchscreens 12
Supply Plenum LED Puck Lights 12
Installing Enclosure Panels 13
Double Island Canopy Style Hoods
Installing U-Channel Strips 14
Proximity (Backshelf) and Crossover Hoods 14
Plate Shelf with Duct Enclosure Installation 15
Balancing the Kitchen Exhaust System 15
Testing Hood Air Volume - Procedures
with Baffle Filters (XB Series) 16-17
with Grease-X-Tractor Filters (XX Series) 18
External Supply Plenum 19
Exhaust Air Balancing Baffles 20
Supply Manual Balancing Baffles 20
Wiring Diagrams
Amerex® Wiring Plan View 21
Ansul® Wiring Plan View 22
Wiring Plan View for Kitchen Systems 23
Wiring for Switch Panels and Circuit Diagrams 24
Maintenance
Daily, Weekly, Periodic 25
Condensate Hood Baffle and Air Diffusers 26
Grease Grabber™ Filters Installation & Cleaning . 25-26
Filter Washing Frequency Guide 27
Troubleshooting 28-29
Replacement Parts 30
Installation / Start-up Checklist 31
Our Commitment 32

Canopy Hood Weights

Hood Model	Hood Depth (Multiply Second Value by Length, then add First Value for Hood Weight)*								
	3 ft .914 m	3.5 ft 1.067 m	4 ft 1.219 m	4.5 ft 1.372 m	5 ft 1.524 m	5.5 ft 1.676 m	6 ft 1.829 m	6.5 ft 1.981 m	7 ft 2.134 m
XBEW	40 lbs + 28 lbs/ft 18 kg + 42 kg/m	44 lbs + 29 lbs/ft 20 kg + 43 kg/m	48 lbs + 30 lbs/ft 22 kg + 45 kg/m	52 lbs + 31 lbs/ft 24 kg + 46 kg/m	56 lbs + 32 lbs/ft 26 kg + 48 kg/m	60 lbs + 33 lbs/ft 28 kg + 49 kg/m	64 lbs + 34 lbs/ft 29 kg + 51 kg/m	68 lbs + 35 lbs/ft 31 kg + 52 kg/m	72 lbs + 36 lbs/ft 33 kg + 54 kg/m
XXEW	40 lbs + 31 lbs/ft 18 kg + 46 kg/m	44 lbs + 32 lbs/ft 20 kg + 48 kg/m	48 lbs + 33 lbs/ft 22 kg + 49 kg/m	52 lbs + 34 lbs/ft 24 kg + 51 kg/m	56 lbs + 35 lbs/ft 26 kg + 52 kg/m	60 lbs + 36 lbs/ft 28 kg + 54 kg/m	64 lbs + 37 lbs/ft 29 kg + 55 kg/m	68 lbs + 38 lbs/ft 31 kg + 57 kg/m	72 lbs + 39 lbs/ft 33 kg + 58 kg/m
XGEW	40 lbs + 39 lbs/ft 18 kg + 58 kg/m	44 lbs + 40 lbs/ft 20 kg + 60 kg/m	48 lbs + 41 lbs/ft 22 kg + 61 kg/m	52 lbs + 42 lbs/ft 24 kg + 63 kg/m	56 lbs + 43 lbs/ft 26 kg + 64 kg/m	60 lbs + 44 lbs/ft 28 kg + 65 kg/m	64 lbs + 45 lbs/ft 29 kg + 67 kg/m	68 lbs + 46 lbs/ft 31 kg + 68 kg/m	72 lbs + 47 lbs/ft 33 kg + 70 kg/m
XBDW	40 lbs + 32 lbs/ft 18 kg + 48 kg/m	44 lbs + 33 lbs/ft 20 kg + 49 kg/m	48 lbs + 34 lbs/ft 22 kg + 51 kg/m	52 lbs + 35 lbs/ft 24 kg + 52 kg/m	56 lbs + 36 lbs/ft 26 kg + 54 kg/m	60 lbs + 37 lbs/ft 28 kg + 55 kg/m	64 lbs + 38 lbs/ft 29 kg + 57 kg/m	68 lbs + 39 lbs/ft 31 kg + 58 kg/m	72 lbs + 40 lbs/ft 33 kg + 60 kg/m
XXDW	40 lbs + 35 lbs/ft 18 kg + 52 kg/m	44 lbs + 36 lbs/ft 20 kg + 54 kg/m	48 lbs + 37 lbs/ft 22 kg + 55 kg/m	52 lbs + 38 lbs/ft 24 kg + 57 kg/m	56 lbs + 39 lbs/ft 26 kg + 58 kg/m	60 lbs + 40 lbs/ft 28 kg + 60 kg/m	64 lbs + 41 lbs/ft 29 kg + 61 kg/m	68 lbs + 42 lbs/ft 31 kg + 63 kg/m	72 lbs + 43 lbs/ft 33 kg + 64 kg/m
XGDW	40 lbs + 43 lbs/ft 18 kg + 64 kg/m	44 lbs + 44 lbs/ft 20 kg + 65 kg/m	48 lbs + 45 lbs/ft 22 kg + 67 kg/m	52 lbs + 46 lbs/ft 24 kg + 68 kg/m	56 lbs + 47 lbs/ft 26 kg + 70 kg/m	60 lbs + 48 lbs/ft 28 kg + 71 kg/m	64 lbs + 49 lbs/ft 29 kg + 73 kg/m	68 lbs + 50 lbs/ft 31 kg + 74 kg/m	72 lbs + 51 lbs/ft 33 kg + 76 kg/m

*Hood weight calculations are based on standard selection. Hood height, accessories and material gauge affect overall hood weight.

Hood Model	Hood Depth (Multiply Second Value by Length, then add First Value for Hood Weight)*										
	2 ft .609 m	2.5 ft .762 m	3 ft .914 m	3.5 ft 1.067 m	4 ft 1.219 m	4.5 ft 1.372 m	5 ft 1.524 m	5.5 ft 1.676 m	6 ft 1.829 m	6.5 ft 1.981 m	7 ft 2.134 m
XBEV			37 lbs + 25 lbs/ft 17 kg + 37 kg/m	41 lbs + 26 lbs/ft 19 kg + 39 kg/m	45 lbs + 27 lbs/ft 20 kg + 40 kg/m	49 lbs + 28 lbs/ft 22 kg + 42 kg/m	53 lbs + 29 lbs/ft 24 kg + 43 kg/m	57 lbs + 30 lbs/ft 26 kg + 45 kg/m	61 lbs + 31 lbs/ft 28 kg + 46 kg/m	66 lbs + 32 lbs/ft 30 kg + 48 kg/m	70 lbs + 33 lbs/ft 32 kg + 49 kg/m
XXEV			37 lbs + 28 lbs/ft 17 kg + 42 kg/m	41 lbs + 29 lbs/ft 19 kg + 43 kg/m	45 lbs + 30 lbs/ft 20 kg + 45 kg/m	49 lbs + 31 lbs/ft 22 kg + 46 kg/m	53 lbs + 32 lbs/ft 24 kg + 48 kg/m	57 lbs + 33 lbs/ft 26 kg + 49 kg/m	61 lbs + 34 lbs/ft 28 kg + 51 kg/m	66 lbs + 35 lbs/ft 30 kg + 52 kg/m	70 lbs + 36 lbs/ft 32 kg + 54 kg/m
XGEV			37 lbs + 36 lbs/ft 17 kg + 54 kg/m	41 lbs + 37 lbs/ft 19 kg + 55 kg/m	45 lbs + 38 lbs/ft 20 kg + 57 kg/m	49 lbs + 39 lbs/ft 22 kg + 58 kg/m	53 lbs + 40 lbs/ft 24 kg + 60 kg/m	57 lbs + 41 lbs/ft 26 kg + 61 kg/m	61 lbs + 42 lbs/ft 28 kg + 63 kg/m	66 lbs + 43 lbs/ft 30 kg + 64 kg/m	70 lbs + 44 lbs/ft 32 kg + 65 kg/m
XO/XD1	16 lbs + 12 lbs/ft	20 lbs + 13 lbs/ft	24 lbs + 14 lbs/ft	28 lbs + 15 lbs/ft	32 lbs + 16 lbs/ft	36 lbs + 17 lbs/ft	40 lbs + 18 lbs/ft	44 lbs + 19 lbs/ft	48 lbs + 20 lbs/ft	53 lbs + 21 lbs/ft	57 lbs + 22 lbs/ft
XD2			24 lbs + 20 lbs/ft 11 kg + 30 kg/m	28 lbs + 21 lbs/ft 13 kg + 31 kg/m	32 lbs + 22 lbs/ft 15 kg + 33 kg/m	36 lbs + 24 lbs/ft 16 kg + 36 kg/m	40 lbs + 25 lbs/ft 18 kg + 37 kg/m	44 lbs + 26 lbs/ft 20 kg + 39 kg/m	48 lbs + 27 lbs/ft 22 kg + 40 kg/m	52 lbs + 28 lbs/ft 24 kg + 42 kg/m	57 lbs + 29 lbs/ft 26 kg + 43 kg/m
XD3			24 lbs + 22 lbs/ft 11 kg + 33 kg/m	28 lbs + 23 lbs/ft 13 kg + 34 kg/m	32 lbs + 24 lbs/ft 15 kg + 36 kg/m	36 lbs + 29 lbs/ft 16 kg + 43 kg/m	40 lbs + 30 lbs/ft 18 kg + 45 kg/m	44 lbs + 31 lbs/ft 20 kg + 46 kg/m	48 lbs + 32 lbs/ft 22 kg + 48 kg/m	52 lbs + 33 lbs/ft 24 kg + 49 kg/m	57 lbs + 34 lbs/ft 26 kg + 51 kg/m

Example 1 • IMPERIAL

Hood Model	XBEW
Hood Length	120 inches (10 ft.)
Hood Depth	60 inches (5 ft)

Hood Weight Equation (lb)
Constant (lb) + Hood Length (ft) x Hood Depth Factor (lbs/ft) = Hood Weight (lbs)
56 lbs + 10 ft x 32 lbs/ft = 376 lbs

Example 2 • METRIC

Hood Model	XD2
Hood Length	42 inches (1.067 m)
Hood Depth	36 inches (0.914 m)

Hood Weight Equation (kg)
Constant (kg) + Hood Length (m) x Hood Depth Factor (kg/m) = Hood Weight (kg)
11 kg + 1.067 m x 30 kg/m = 43 kg

Model Number Code

XB - E - W

Filter

XB - Baffle Filter
XX - Grease-X-Tractor™
XG - Grease Grabber™

Make-Up Air Style

E - Exhaust Only
D - Exhaust Only - Double-Wall Front

Configuration

W - Wall Style Canopy
V - Single-Island Style (V-Bank) Canopy
P - Proximity (Backshelf)
C - Crossover

Proximity Hood Weights

Hood Model		Base Weight and Weight per Length based on Hood Depth			
		23 to 25 in. .584 to .635 m	26 to 28 in. .660 to .711 m	29 to 32 in. .737 to .813 m	33 to 36 in. .838 to .914 m
XB, XX, XGEP	Base Weight	28 lbs 12.70 kg	30 lbs 13.61 kg	31.5 lbs 14.29 kg	33.5 lbs 15.20 kg
	Weight Per Length	20.4 lbs/ft 30.36 kg/m	21 lbs/ft 31.25 kg/m	21.6 lbs/ft 32.14 kg/m	22.2 lbs/ft 33.04 kg/m

*Hood weight calculations are based on standard selection. Hood height, accessories and material gauge affect overall hood weight.

Crossover Hood Weights

Hood Model		Base Weight and Weight per Length based on Hood Depth	
		30 in. .762m	36 in. .914 m
XB, XX, XGEC	Base Weight	36 lbs 46.13 kg	41 lbs 61.01 kg
	Weight Per Length	17 lbs/ft 25.30 kg/m	18 lbs/ft 26.79 kg/m

*If selected with wall mount, weight will increase by 2.3 lbs/ft (or 3.42 kg/m)

Example 1 • IMPERIAL

Hood Model	XBEP
Hood Length	60 inches (5 ft)
Hood Depth	24 inches (2 ft)

Hood Weight Equation (lb)
Base Weight (lbs) + [Length (ft) x Weight per Length (lbs/ft)] = Hood Weight (lbs)
28 lbs/ft + (5 ft x 20.4 lbs/ft) = 130 lbs

Example 2 • METRIC

Hood Model	XXEP
Hood Length	192 inches (4.877 m)
Hood Depth	33 inches (0.838 m)

Hood Weight Equation (kg)
Base Weight (kgs) + [Length (m) x Weight per Length (kg/m)] = Hood Weight (kg)
15.20 kg + (4.877 m x 33.04 kg/m) = 176.336 kg

Supply Plenum - Weights and Dimensions

External Supply Plenum Type	Width		Height		Length per section		Weight*	
	in.	mm	in.	mm	ft.	m	lbs/ft	kg/m
Air Supply Plenum (ASP)	14	355.6	4	101.6	3 to 12	0.9 to 3.7	7.8	5.2
	18	457.2	4	101.6	3 to 12	0.9 to 3.7	8.7	5.8
Split Supply Plenum (SSP)	24	609.6	4	101.6	3 to 12	0.9 to 3.7	14.1	9.5
	28	711.2	4	101.6	3 to 12	0.9 to 3.7	15.1	10.1
Back Supply Plenum (BSP)	6	152.4	Variable	Variable	3 to 16	0.9 to 4.9	35.0	52.1

*Does not include all options and accessories

Prior to Installation

Prior to installation, check with the Authorities Having Jurisdiction (AHJ) on clearance requirements to structures surrounding the hood and other equipment. Verify there is enough space to safely lift hood up into its operating position and enough clearance around the hood for components like fire system connections, hood lights, hood control components, etc. Consider access for servicing the equipment and the different components when locating the hood.

If the hood is a grease hood (Type I), the UL label located on the end panel on the inside of the hood will provide pertinent information regarding the hood installation. Information includes:

- Allowable cooking surface temperatures of the cooking equipment
- Front and side overhang/underhang requirements
- Minimum exhaust (and possibly supply) airflow requirements
- Hood lighting load information and restrictions
- Filter information
- Fire damper fusible link replacement information, if applicable

With the hood still inside its packing crate, position the unit beneath its installation location. Carefully remove the packing crate and place some protective material on the floor next to the crate to avoid damaging the hood as it is tipped on its side. Tip the hood carefully onto the protective material.

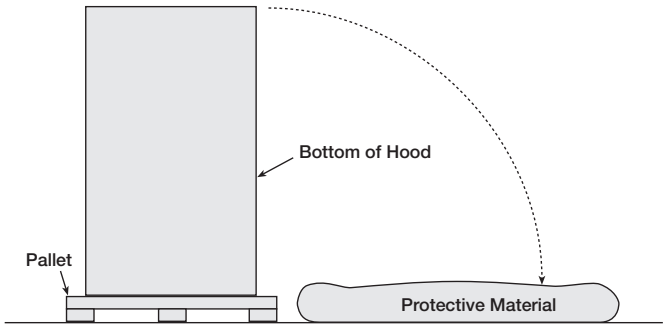

Wall or Single Island Canopy Hoods

Hood Installation Overview

1. If the hood is provided with filler panels, shipped loose, install them now. See page 7, Filler Panel Installation. Filler panels may be integral to the hood, which requires no additional installation.
2. If the hood is equipped with Clearance Reduction Methods, refer to pages 7 and 8 for special considerations with hanging the hood.
3. If the hood is provided with hood/duct sensors or thermostats, install them now. See the Installation and Operations guide provided with the control panel.
4. If the hood was provided with either exhaust collars or supply collars that have shipped loose, it is recommended that the exhaust and supply openings are cut and collars are attached now, prior to hanging the hood. See page 8, Installing Duct Collars.
5. If the hood is provided with a back supply plenum (BSP) install it now. See page 9, Installing the Back Supply Plenum.
6. If possible, connect (weld) exhaust duct to the hood while on the floor, unless it prohibits the hood from being raised into place. For information on ductwork, see page 9, Ductwork.
7. At this point, drill holes in the building structural support system or utilize uni-strut to match up with the hanger bracket holes. Then slowly and evenly raise the hood into position and insert 1/2-inch (1.27 cm) diameter threaded rod (provided by others) between the hanger brackets and structure.

   For Type I hoods, the hood hanging height requirements are given on the UL label. Typical canopy hood hanging height will be 80 inches (203.2 cm) off the finished floor (to the front lower edge of the hood).

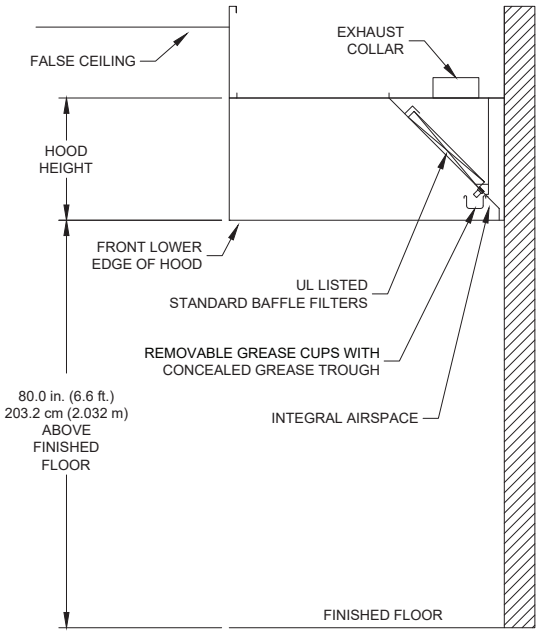

NOTE

If the hood is supplied with ceiling enclosures, the height of the enclosures will typically be the distance from the ceiling to the top of the hood. Use this dimension to find the hood's hanging height off of the floor.

For questions regarding the supporting structure and its integrity, either the contractor or structural engineer needs to be consulted.

NOTE

All hanger brackets MUST be used and the hood must be properly supported while lifting to prevent damage or distortion to the hood.

NOTE

The hood MUST be hung evenly. If hung unevenly, this may cause grease drainage problems. Provide additional support if necessary so that the hood doesn't move in a manner that is acceptable with the Authorities Having Jurisdiction (AHJ).

WARNING

When mounting the hood or any components against the hood, never puncture or drill into the canopy. This will void the hood listing and warranty.

8. If the hood was provided in sections with the continuous capture option, once each hood section is hung, install this option now. See page 9, Continuous Capture Plenum Hoods.
9. If the hood was provided with any front or side external supply plenums (other than the back supply plenum), install these now. See page 10, Installing Front/Side External Supply Plenums.
10. Install the remainder of both the exhaust and supply ductwork. For further guidelines see page 9, Ductwork.
11. If the hood is provided with any backsplash/sidesplash panels, install them now. See page 11, Installing Backsplash Panels.
12. If the hood is provided with any end skirts, install them now. See page 12, Installing End Skirts.
13. If the hood is a Type I hood, it will require a fire suppression system. Once the Type I hood(s) and ductwork are fully installed, appliances are in place and walls are complete, the fire system should be completed. If the hood is provided with a full factory-coordinated fire suppression system installation, the certified fire system installer should be contacted at this time to complete the final hookups, testing and system certification based upon manufacturer's specification and local fire codes. If the hood is not provided with either pre-piping only or no fire suppression system, it is the responsibility of a certified fire system installer to install, test and certify the system based upon manufacturer's specification and local fire codes.
14. If the hood is provided with a control package, these will need to be installed and wired by the jobsite electrician. This typically includes wiring the hood temperature sensors, hood lights and wiring the fire suppression micro-switches. For general hood electrical connections, see page 12, Electrical Connections. If applicable, see the Installation and Operations guide provided with the control package.
15. If the hood is provided with enclosure panels, install them now. See page 13, Installing Enclosure Panels.
16. Install the rest of the hood accessories provided. This may include grease filters or condensate hood baffles, grease cups, light bulbs, light globes, and trim strips.

It is recommended that the protective plastic sheeting remain on the hood until fully installed to better protect the product from scratching and marking. Once removed, clean using isopropyl alcohol and rag and polish using stainless steel polish the hood. Be sure to wipe with the grain and not against it.

Filler Panel Installation

1. Uncrate the hood and lay it on the floor with protective material between the hood and the floor.
2. Bolt the filler panels together with 5/16 in. bolts provided in the hardware package.
3. Position the filler panels to the hood back, and tack-weld them into place.

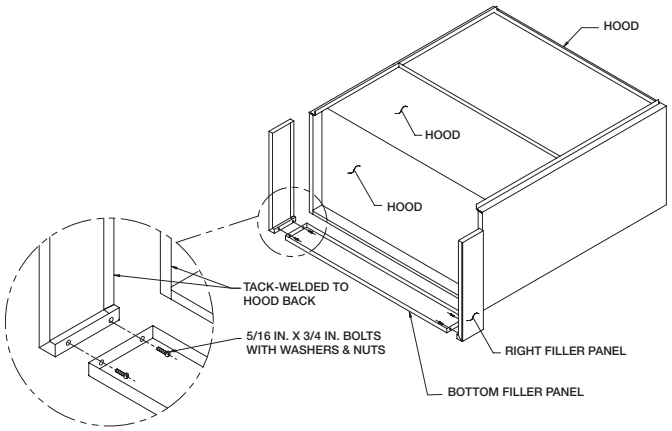

4. To allow for ease of cleaning, caulk the external seams with NSF Approved silicone caulk (GE SCS1009, or its equivalent). The caulk is not provided.

Clearance Reduction Methods

Clearance reduction methods have been evaluated and tested and are listed by UL (Underwriters Laboratory). The method of test was derived from the UL 710 test standard.

The hood may be installed with zero clearance to combustible materials if constructed in the following manner.

1. One inch (2.54 cm) thick layer of insulation of Owens Corning® Type 475, Johns Manville Type 475, IIG® MinWool-1200® Flexible Batt, or Knauf Insulation Type EI 475.
2. Insulation must be held securely in place. Pins that are welded or secured with an adhesive may be used.
3. A backsplash panel must be attached to the wall (insulated or uninsulated).

To comply with the UL Listing, the cooking appliances must be as follows:

- Maximum surface temperature is 700°F (371°C)
- Appliances are located at least 3 in. (7.62 cm) from the rear wall
- Appliances are at least 40 in. (101.6 cm) below the bottom front edge of the hood

The hood may be installed with 3 in. (7.62 cm) clearance to limited combustible materials per NFPA 96 if constructed in one of the following methods:

- 3 in. (7.62 cm) rear uninsulated stand-off
- 3 in. (7.62 cm) top enclosure panel system
- 3 in. (7.62 cm) end uninsulated stand-off

Top Clearance Reduction Options

One inch (2.54 cm) layer of insulation installed on top of the hood (optional) meets zero inch requirements for clearance to combustible surfaces as outlined under the clearance reductions methods.

Three inches (7.62 cm) uninsulated airspace installed on top of hood (optional) meets NFPA 96 requirements for clearance to limited combustible surfaces.

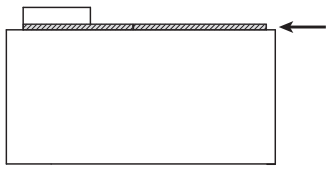

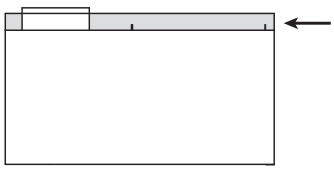

Back and Front Clearance Reduction Options

One inch (2.54 cm) layer of insulation in 3 in. (7.62 cm) back stand-off meets zero inch requirements for clearance to combustible surfaces as outlined under the clearance reduction methods.

Three inches (7.62 cm) uninsulated back stand-off meets NFPA 96 requirements for clearance to limited combustible surfaces.

One inch (2.54 cm) layer of insulation factory-installed on the front of the hood (optional) meets zero inch requirements for clearance to combustible surfaces.

End Clearance Reduction Options

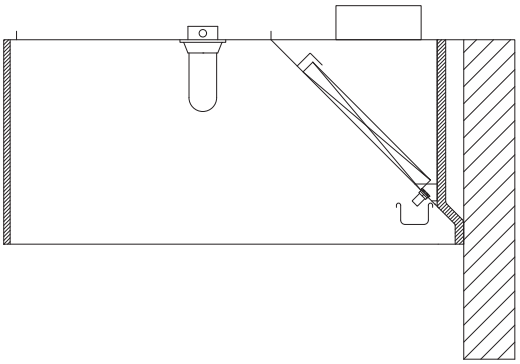

One inch (2.54 cm) layer of insulation factory-installed on the end of the hood (optional) meets zero inch requirements for clearance to combustible surfaces under the clearance reduction methods.

Three inches (7.62 cm) uninsulated airspace installed on end of hood (optional). Meets NFPA 96 requirements for clearance to limited combustible surfaces.

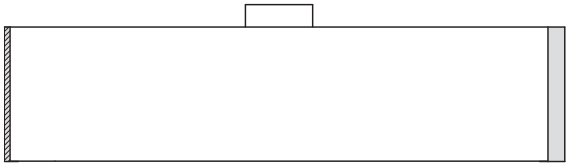

Installing Duct Collars

Exhaust Duct Collars

1. The exhaust duct connection needs to be located within 48 in. (121.92 cm) from the center of the hood length to the center of the duct connection and within shaded area as shown.

Top View of the Hood

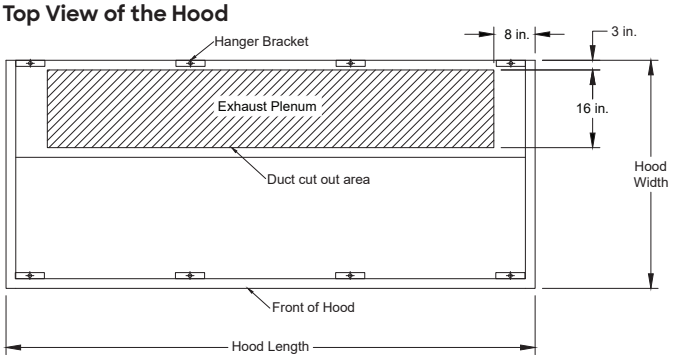

Back View of the Hood

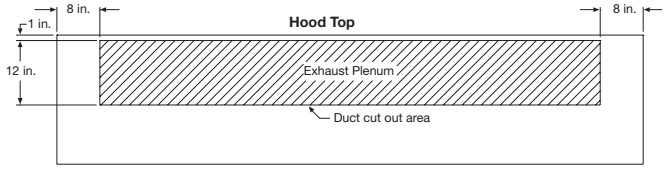

2. The exhaust duct connection is to be a continuous liquid-tight weld. Utilizing the 1” (rectangular collars) or 1/2” (round collars) flange, weld with a non-ferrous filler wire, such as silicon bronze or stainless steel filler wire. Protect all stainless steel areas from weld splatter.

Installing the Back Supply Plenum

Install the Supply Duct Collar

1. Find the center of the back supply plenum.
2. If the back supply plenum is to have one opening, cut the opening such that it is centered at L /2 from the plenum end. (Fig. 1)
3. If the back supply plenum is to have two openings, cut openings such that they are centered at L /4 from each end of the plenum. (Fig. 2)

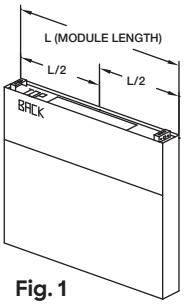

Fig. 1

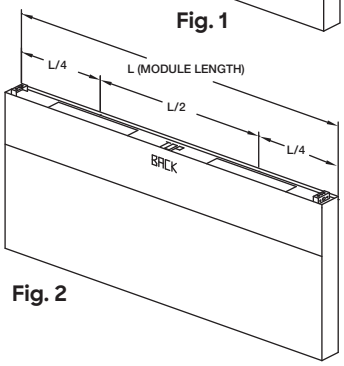

Fig. 2

4. Place the duct collar(s) over the opening(s), fastening with screws or tack-welds every 4 to 6 in. (10.16 to 15.24 cm). (Fig. 3)

Hang the Plenum

5. Hang the back supply plenum from the ceiling.

   The back supply plenum needs to be mounted 31.25 in. (79.375 cm) above the finished floor. This is measured from the lowest rear edge of the back supply plenum to the finished floor. (Fig. 4)

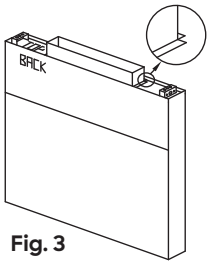

Fig. 3

   Hang using threaded rod placed through the hanger brackets.

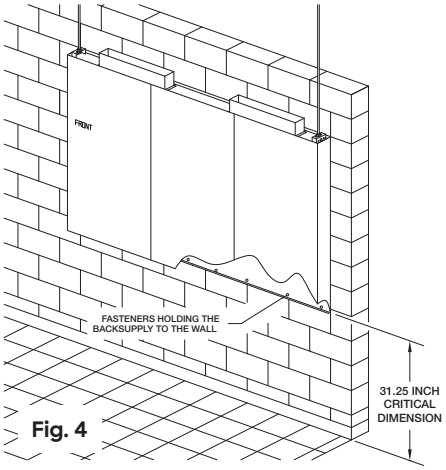

Fig. 4

6. Fasten the back supply to the wall, going through the lower back supply wall.
   - These fasteners are to help maintain the location of the back supply, and are not intended to hold the weight of the back supply unit.
   - The fasteners should not interfere with the removable air diffusers.

Ductwork

Exhaust - As specified in NFPA 96, Ch. 7.5 (latest edition), exhaust duct systems must be constructed in the following manner:

Materials: Ducts shall be constructed of and supported by carbon steel not less than 1.37 mm (0.054 in.) (No. 16 MSG) in thickness, or stainless steel not less than 1.09 mm (0.043 in.) (No. 18 MSG) in thickness.

Installation: All seams, joints, penetrations, and duct to hood collar connections shall have a liquid-tight external weld. If you have an automatic fire damper, please refer to that manual for installation instructions now.

NOTE

For hoods with fire dampers in the exhaust and supply duct collars, an access panel for cleaning and inspection shall be provided in the duct. This panel shall be as close to the hood as possible but should not exceed 18 in. (45.72 cm).

Supply - Supply ductwork (where applicable) should be connected to the hood in a manner approved by the local code authorities.

For proper installation of duct collars when they are shipped unattached, see page 8.

Continuous Capture Plenum Hoods

1. Remove the support angles provided for support during shipping on the open end panels. Install and level both hoods.

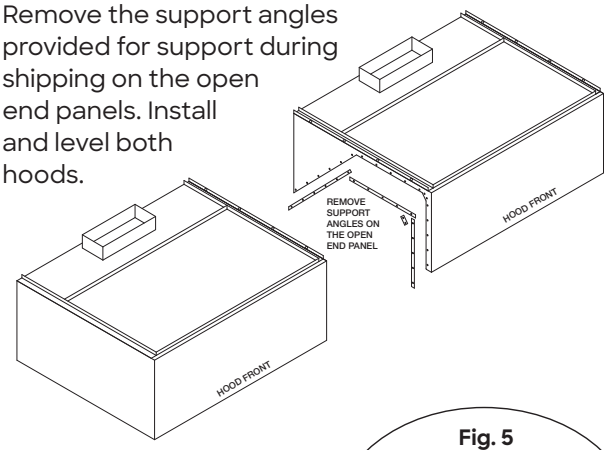

2. After leveling, secure the hoods together by tack-welding and/or bolting the angles that are located at the top of the hoods along its width (Fig. 5).

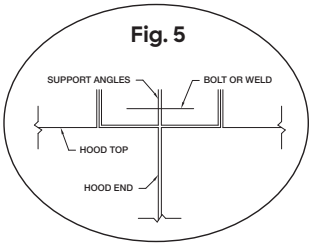

Fig. 5

3. Next, fasten the hoods together at its inside plenum profile using u-clips and bolts (Fig. 6). Caulk this joint with NSF Approved silicone caulk (GE SCS1009 or its equivalent). The caulk is not provided.

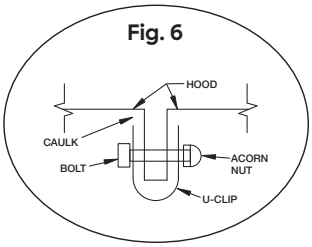

Fig. 6

Installing External Supply Plenums

NOTE

The supply plenum is provided with plenum clips that assist in hanging the plenum. Do not hang plenums using only the clips. Threaded rod or uni-strut must also be used.

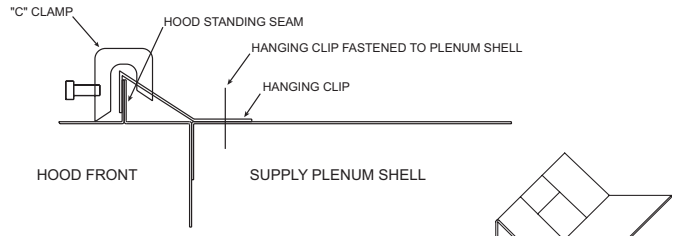

Supply Plenum Clip

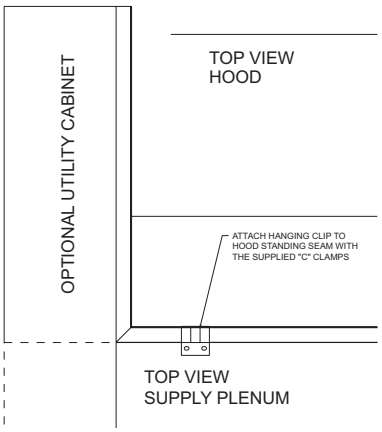

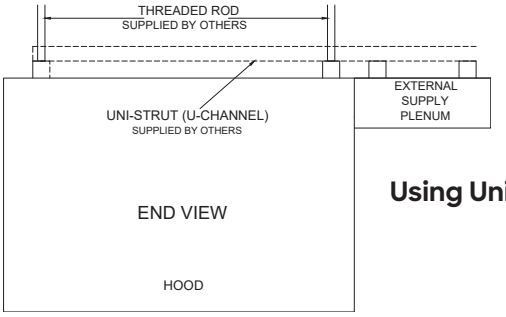

Using Uni-strut

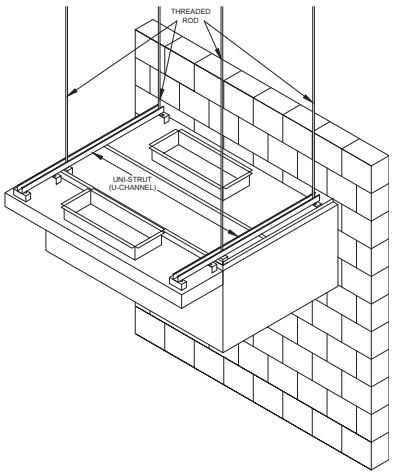

Uni-strut (supplied by others) supporting the hood may be cantilevered over the end of the hood where applicable. Utilizing the external supply plenum's hanger brackets, securely fasten to the uni-strut.

Air Curtain Supply (ASP) Mounted with uni-strut and threaded rod

When using the uni-strut (supplied by others), it must be bolted to the hood and external supply plenum hanger brackets.

NOTE

The uni-strut needs to be the full length of the hood and the external supply plenum.

Using Hanger Brackets and Threaded Rod

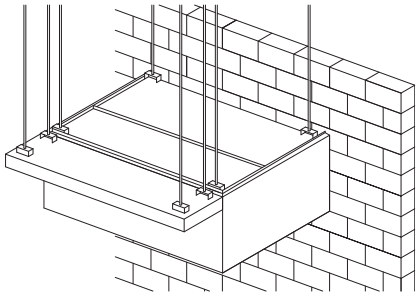

Air Curtain Supply Plenum (ASP)

1. Insert 1/2 in. (12.7 mm) diameter threaded rod (by others) into hanger brackets on the external supply plenum top. Raise and hang the external supply plenum from adequate roof or ceiling supports.

NOTE

Ensure the external supply plenum is installed flush with the hood front and is plumb and level by adjusting the threaded rod(s). There should be no gap between the bottom of the external supply plenum and the hood after installation and adjustments are completed.

2. The external supply plenum should be resting lightly against the hood. The hood is only used to position the plenum; it is not intended to support the plenum. All hanger brackets on the external supply plenum must be used and the plenum must be properly supported while lifting to prevent damage or distortion. The external supply plenum must be level to operate properly.
3. It is recommended that caulk be applied at the mating seams and surfaces of the external supply plenum, the hood, and the wall. If the external supply plenum is next to a wall, you will need to caulk around the surface next to the wall. Caulk the joints with NSF Approved silicone caulk (GE SCS1009, or its equivalent). The caulk is not provided.

Installing the Supply Duct Collar to the Plenum (if shipped loose)

Place the duct collar(s) over the opening, fastening with tack-welds at 1 to 2 in. (2.54 to 5.08 cm) intervals, or sheet metal screws at 3 to 6 in. (7.62 to 15.24 cm) intervals. It is suggested that the duct collar be attached to the supply plenum before installing the supply plenum.

Installing Backsplash Panels

Flat Backsplash Panel

Material: Stainless

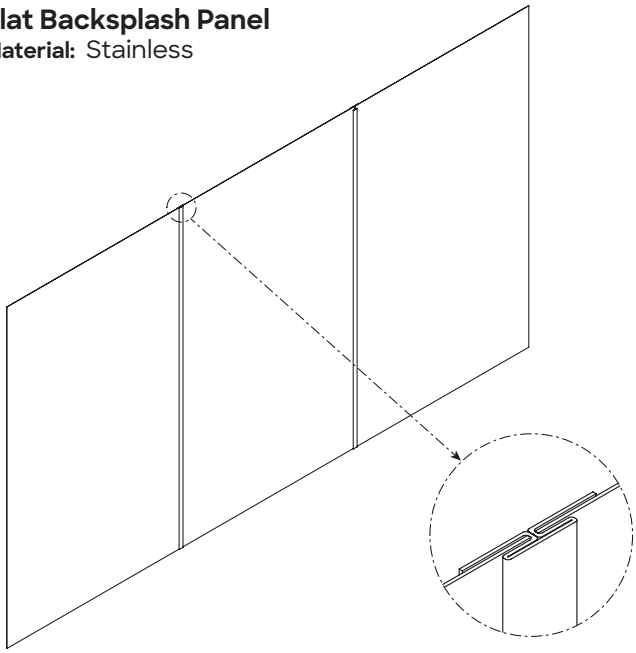

Insulated Backsplash Panel

Material: Stainless

Insulation: 1 in. (25.4 mm)

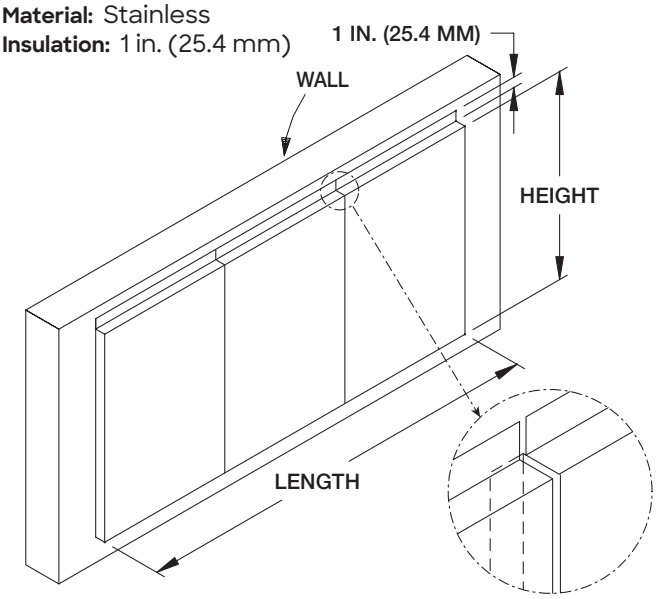

NOTE

- Backsplash length up to 47.25 inches (1200.15 mm) wide ship in one piece; panel lengths over 47.25 inches (1200.15 mm) ship in multiple pieces when panel height is <66 inches (1674.4 mm) or >80 inches (2032 mm).
- Backsplash length up to 48 inches (1219.2 mm) wide ship in one piece; panel lengths over 48 inches (1219.2 mm) ship in multiple pieces when panel height is ≥66 inches (1676.4 mm) or ≤80 inches (2032 mm).

1. After hood is hung into position, slide the flat flange of the backsplash panel behind the back of the hood. If the hood is provided with flat backsplash panels, divider bars will be provided. Install divider bars between panels as shown in the flat backsplash panel section view.
2. After the backsplash panel and dividers have been positioned, drill holes in the panel and fasten to the wall. (Fasteners provided by others). The holes should be spaced to adequately secure the panel to the wall.
3. Caulk the joints between the hood and the backsplash panel with NSF Approved silicone caulk (GE SCS1009 or its equivalent). Caulk provided by others.
4. Caulk the joint between the backsplash panels when multiple panels are required with NSF Approved (GE SCS1009 or its equivalent). Caulk provided by others.

NOTE

Panels up to 45 in. (1143 mm) wide ship in one piece; over 45 in. (1143 mm) in multiple pieces.

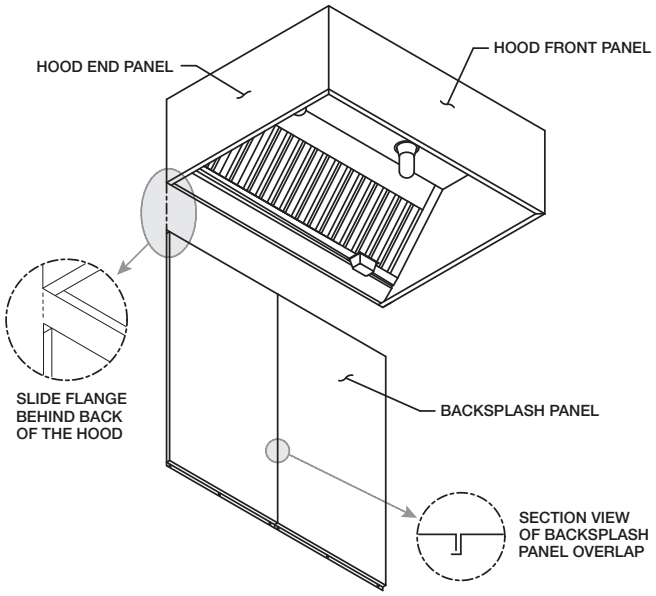

Installing End Skirts

1. After the hood is hung in position, line up the top of the end skirt with the end panels of the hood.
2. Drill a hole in the hood end panel to line up with the hole in the end skirt. Attach the end skirt with a 1/4 in. bolt and cap nut to the inside of the hood, or tack-weld the end skirt to the hood.
3. Position the end skirt against the wall and attach. The method depends on the wall construction. (Fasteners provided by others).
4. Caulk the internal joint formed by the end skirt and the hood end panel with NSF Approved silicone caulk (GE SCS1009 or its equivalent). The caulk is not provided.
5. To allow for ease in cleaning, also caulk all the external seams.

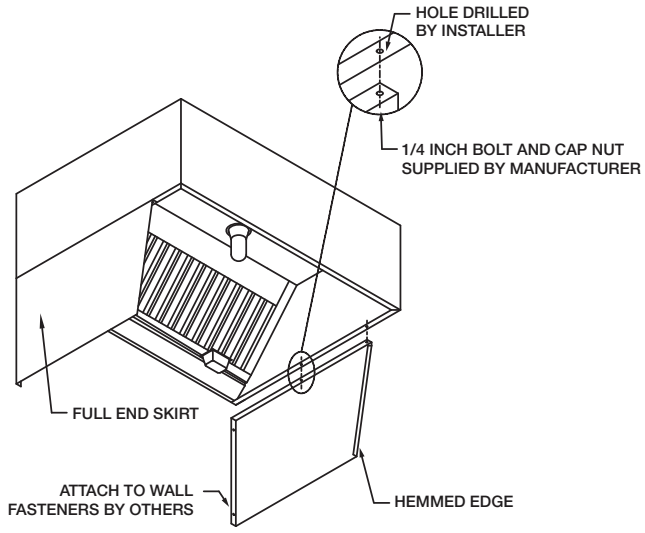

Electrical Connections

See pages 25-28 for more wiring details regarding the fire system, fan control and switches.

Hood Lights

If the hood is provided with lights, a junction box will be located on top of the hood for field connections. Use minimum 14 AWG copper wire. Light bulbs will not be provided (unless equipped with round LED style fixtures). For incandescent or compact fluorescent (CFL) fixtures, standard light bulbs with E26 base types up to 100 watts may be used. For fluorescent fixtures, consult information on inside of fixture for recommended tube type.

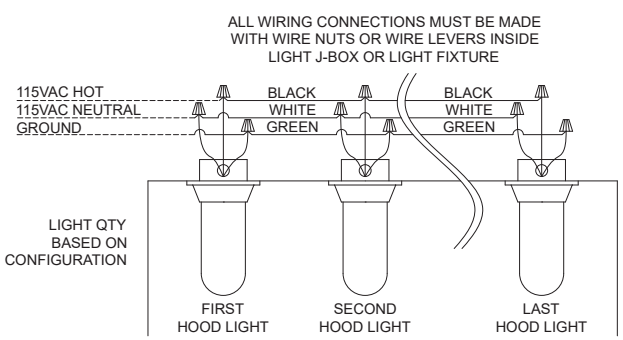

CAUTION

For multiple hood systems that have more than 14 lights total, incandescent, the hood lights must be wired to multiple circuits. Each circuit must have less than 14 lights total.

WARNING

All 115 VAC field wiring (or higher) must be high temperature rated and must be routed through hard or flex conduit. All low voltage field wiring should be plenum rated if not routed through conduit. All wiring should not come in contact with the surface of the hood.

Round LED Hood Light

If provided with 6-inch (15.20 cm) round LED hood lights, wire the light power (100-277 VAC) using black and white wires. Each light fixture uses 16 watts. Light color temperature are factory set to 4000K. For warmer light, change switch under top cover to 3000K. For cooler light, change switch to 5000K.

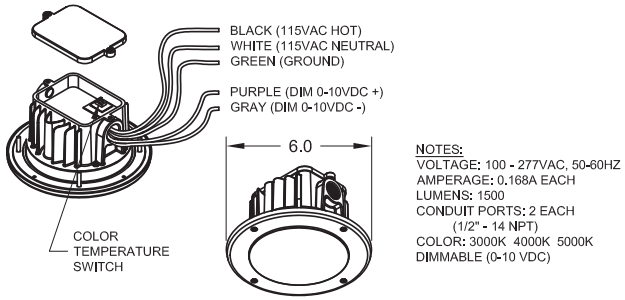

Hood Light, Fan and/or Thermal (Tempering) Switches

If the hood is provided with hood light, fan and/or thermal (tempering) switches and the switches are located on a hood mounted utility cabinet or on the face of the hood, a junction box will be located on top of the hood for field connections and must be connected in the field (unless factory-wired). Use minimum 14 AWG copper wire for all 115 VAC field connections. Standard switches will be rated for 15 amps. Higher amperage switches are available upon request.

Keypads or Touchscreens (Kitchen Controls / Autoscrubber)

If the hood system is equipped with a Kitchen Control or Autoscrubber control panel, it may be equipped with either a keypad or touchscreen that can be mounted on a hood-mounted utility cabinet or mounted on the face of the hood. The keypad/touchscreen may be factory connected and wired to a female-to-female connector on top of the hood where the field will have to run factory-provided cabling from this connector back to the control panel. See the Autoscrubber or Kitchen Controls wiring schematic and Installation and Operation Manual for more details.

Supply Plenum LED Puck Lights

If the hood is provided with supply plenums equipped with 115 VAC LED puck lights, a junction box will be located on top of the plenum for field connections. Use minimum 14 AWG copper wire for field connections. Each light uses 3.5 watts.

Installing Enclosure Panels

Before installing the enclosure panels, make sure the hood is hung in position with all the ductwork attached and all fire system and electrical connections completed.

1. Position the end enclosure panels on the hood, and clamp into place with clamps provided or tack-weld the panels into place.
2. Fasten the end enclosure panels to the wall; method depends on wall construction. (Fasteners provided by others).

   If the hood is a double island, bolt the end enclosure panels together. (Fasteners provided by others).
3. Position the front enclosure panel(s) on the hood, and bolt to the end enclosure panels with the 5/16 in. bolts provided in the hardware package.
4. Tack-weld or clamp the front enclosure panel(s) to the hood. If clamps are used, they must be positioned 4 in. (10.16 cm) from the ends and in the center of the front enclosure panel.

   If hood is provided with supply plenums, the front enclosure panel should be tack welded or use self-tapping screws on the inside of the front panel to secure the panel in place to the ASP.
5. To allow for ease of cleaning, caulk the external seams with NSF Approved silicone caulk (GE SCS1009, or its equivalent). The caulk is not provided.

NOTE

Installation instructions may not be applicable for concrete ceilings.

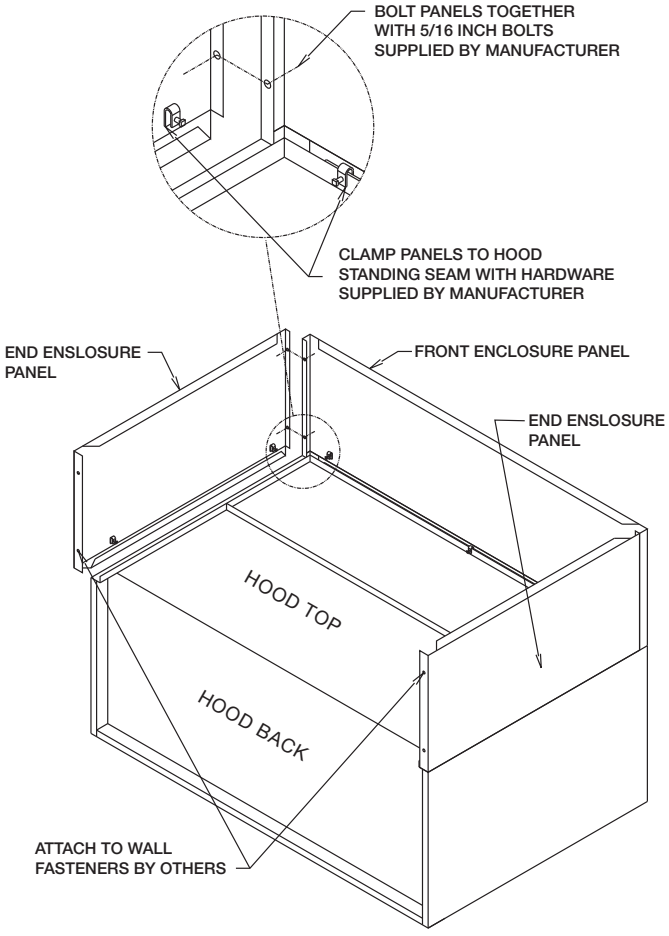

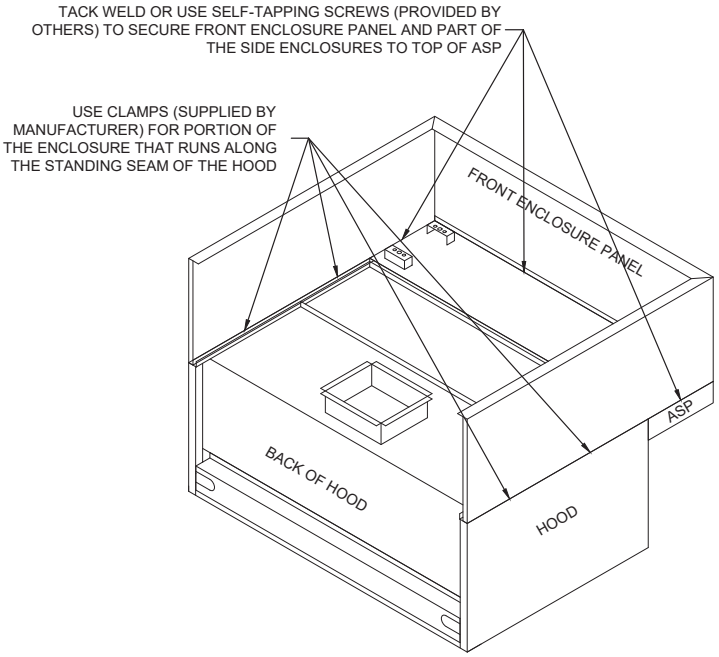

Double Island Canopy Style Hoods

NOTE

Before hanging the hoods, please verify the hood marks to ensure the correct hood is hung on the correct side.

A double island hood is created by installing two wall style hoods back to back. Use the installation procedure described for single island canopy hoods; install and level both hoods. After leveling, secure the hoods together by tack-welding and/or bolting the rear mounting brackets together. Double island hoods may also be provided with a U-Channel to seal the seam between the two hoods.

Installing U-Channel Strip

1. After the hood is hung in position and leveled, apply caulk to the inside edge of the double island clip.
2. Position and install the clip by tapping into position along clip (friction fit).
3. Caulk edges to seal out grease and allow for ease of cleaning. Caulk with NSF Approved silicone caulk (GE SCS1009 or its equivalent). The caulk is not provided.

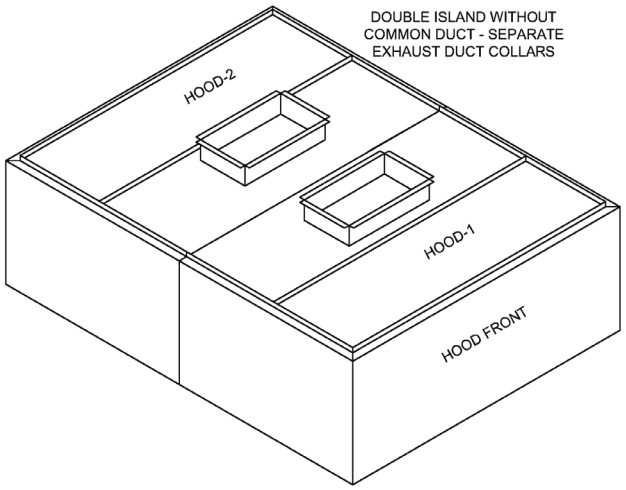

Proximity (Backshelf) and Crossover Hoods

A proximity or crossover style hood is designed to be mounted close to the cooking appliance and typically incorporates underhang instead of overhang as utilized with canopy style hoods.

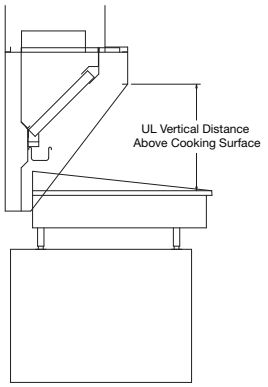

The proximity or crossover design, in addition to the hanger brackets, may include a back mounting flange. Therefore, hanging the hood differs slightly from that of a wall or single island canopy hood. If the wall mount option is selected:

1. Locate the studs in the wall.
2. Attach wall cleat to wall studs every 16” (wall cleat must be mounted to wall studs to support the full weight of the hood).
3. Drill 1/2 inch (13 mm) diameter holes in the hood mounting flange. Be sure to align to wall studs.
4. Lift hood into a level position and lag bolt hood to wall stud/bracing (fasteners by others).
5. Hang cleat on back of hood to wall cleat.
6. Bolt 1/2 in (13 mm) threaded rod into the remaining hanger brackets (not required for crossover hood).
7. Fasten threaded rod to the ceiling supports (not required for crossover hood),then level the hood.

If the proximity or crossover hood was provided with a back supply plenum, the hood mounting flange may be fastened to the back supply using sheet metal screws (by others). Pilot holes are recommended.

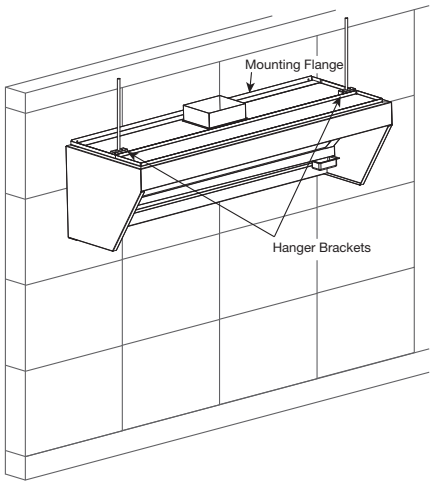

Plate Shelf with Duct Enclosure Installation

If the proximity or crossover hood is provided with a plate shelf, this will be factory mounted to the hood (shown loose in figure below). Similar to the standard enclosure panel installation procedures, make sure the hood is hung in position with all the ductwork attached and fire system and electrical connections completed before attaching the enclosures.

1. Tack-weld or clamp end enclosure panels into place (clamps provided).
2. Attach the end enclosure panels to the wall (fasteners are not provided).
3. Position the front enclosure panel(s) on the hood and bolt to the end enclosure with the 5/16 inch bolts provided.
4. Tack-weld or clamp the front enclosure panel(s) to the hood. If clamps are used, they must be positioned 4 inches (100 mm) from the ends and in the center of the front enclosure panel.
5. To allow for ease of cleaning, caulk the external seams with NSF Approved silicone caulk (GE SCS1009, or its equivalent). The caulk is not provided.

NOTE

Installation instructions may not be applicable for concrete ceilings.

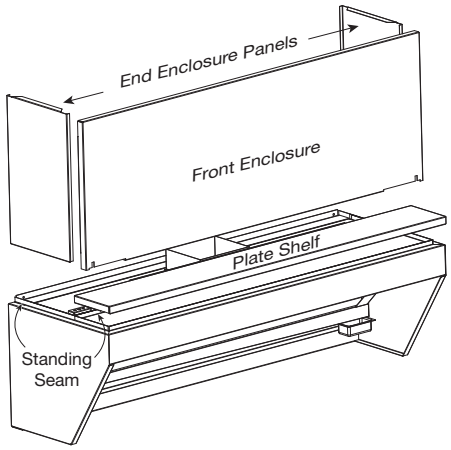

Balancing the Kitchen Exhaust System

To determine the proper dining room air balance:

1. Refer to engineering drawings to determine total exhaust CFM from dining areas. (exhaust fans, heating and air conditioning units, rest rooms, etc.)
2. Determine the total CFM of make-up air supplied to dining area.
3. Subtract #1 from #2 above. If the result is a negative number, a negative pressure is present in the dining area. In this case, kitchen exhaust odors could be drawn from the kitchen to the dining area. Therefore, exhaust or supply air should be adjusted to provide a slight positive pressure in the dining area.

To determine proper kitchen air balance:

1. Refer to engineering drawings to determine total exhaust from the kitchen area. (exhaust hoods, dishwasher hoods, etc.)
2. Determine total CFM of make-up air supplied to kitchen area. (make-up air hoods, heating and air conditioning units, etc.)
3. Subtract #1 from #2 above. The result should be a negative number. If the result is a positive number, a positive pressure is present in the kitchen area. Kitchen odors could be forced into the dining area. Also, a positively balanced kitchen area can adversely affect the performance of the exhaust hood.

CAUTION

According to NFPA 96, Ch. 8-3 Replacement Air: Replacement air quantity shall be adequate to prevent negative pressures in the commercial cooking area(s) from exceeding 4.98 Pa (0.02 in. wg).

NOTE

The airflow rates were established under controlled laboratory conditions.

NOTE

Greater exhaust and/or lesser supply air may be required for complete vapor and smoke control in specific installations.

Testing Hood Air Volume

Baffle Filter - Rotating Vane Method

With all the filters in place, determine the total hood exhaust volume with a rotating vane anemometer as follows:

1. All cooking equipment should be on.
2. Measure the velocities. Velocity measurements should be taken at five locations per filter. These must be over a filter slot as in Fig. 7.

Fig. 7

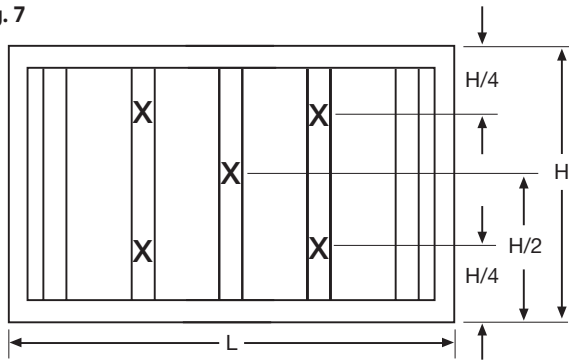

Nominal Filter Size

Measure and record the velocity of each location.

A digital 2.75 in. (69.85 mm) rotating vane anemometer or equivalent is suggested. The center of the anemometer should be held 2 in. (50.8 mm) from the face of the filters. It is helpful to make a bracket to keep the anemometer at the 2 in. (50.8 mm) distance and parallel to the filter. Both squareness and distance are very important for accuracy.

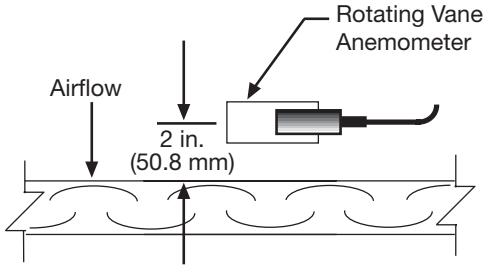

Calculate the average velocity for the filter.

3. Determine the filter's conversion factor from the table.
4. Calculate the filter's volume in CFM (m^3/hr) by multiplying the average velocity by the conversion factor.
5. Calculate the hood's volume by repeating the process for the remaining filters and summing the individual filter volumes.

Nominal Filter Size (H x L)		Imperial Conversion Factor	Metric Conversion Factor
Inches	Millimeters		
16 x 16	400 x 400	1.63	.157
16 x 20	500 x 400	2.13	.198
20 x 16	400 x 500	1.90	.177
20 x 20	500 x 500	2.48	.230

Example: Exhaust only hood with three 20 x 16 filters

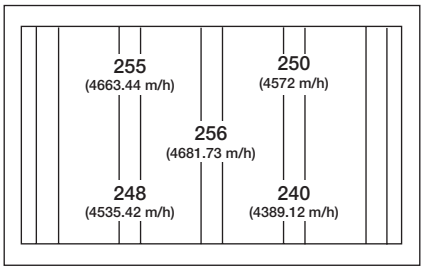

Measured velocities in ft/min. for one 20 x 16 filter

$$\text{Average Velocity} = \frac{\text{Sum of Velocity Readings}}{\text{Number of Readings}}$$

$$\text{(Imperial)} = \frac{255 + 250 + 256 + 248 + 240}{5} = 249.8 \text{ ft/min.}$$

$$\text{(Metric)} = \frac{4663 + 4572 + 4681 + 4535 + 4389}{5} = 4568 \text{ m/hr}$$

For a nominal filter size of 20 x 16, the conversion factor is 1.90 Imperial (.177 Metric)

Volume for one filter = Conversion Factor x Average Velocity

(Imperial) = 1.90 x 249.8 ft/min. = 474.6 cfm

(Metric) = .177 x 4568 m/hr = 809 m^3/hr

Total hood volume = (Filter 1 Volume) + (Filter 2 Volume) + (Filter 3 Volume)

(Imperial) = 474.6 + 455.4 + 470.1 = 1400.1 cfm

(Metric) = 809 + 880 + 799 = 2488 m^3/hr

Baffle Filter - Shortridge VelGrid Method

With all the filters in place, determine the total hood exhaust volume with a Shortridge meter as follows:

1. All cooking equipment should be on. If the hood has internal short circuit make-up air, it should be turned off.
2. Measure velocities
   - Set up the Shortridge meter.
   - For 20 in. (500 mm) wide filters, position the grid as shown in Fig. 8 and 9. Average the two measurements.
   - For 16 in. (400 mm) wide filters, position the grid as shown in Fig. 10.
   - Take velocity readings for each filter.
3. Calculate each filter's volumetric flow rate as follows:

   Calculate each filter's average velocity by summing the velocity readings and dividing by the number of readings for each filter.

   Multiply the average velocity by the conversion factor to obtain the volumetric flow rate for each filter.
4. Calculate the hood's total volumetric flow rate by summing the volumetric flow rate of each individual filter in the hood as calculated in Step 3.

NOTE

For best accuracy multiply the velocity of each filter by its conversion factor and sum the flow rates. Averaging the velocity measured for all filters may cause error.

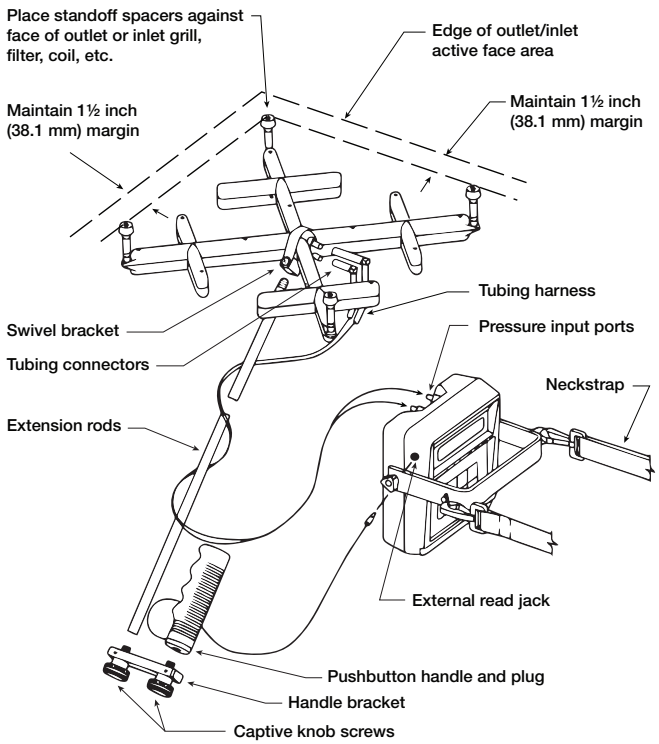

Nominal Filter Size (H x L)		Imperial Conversion Factor	Metric Conversion Factor
Inches	Millimeters		
16 x 16	400 x 400	1.66	.154
16 x 20	400 x 500	2.10	.195
20 x 16	500 x 400	1.96	.182
20 x 20	500 x 500	2.40	.223

Example: Measured velocities for a 20 x 20 filter = 185 and 189 ft/min.

$$\text{Average Velocity} = \frac{\text{Sum of Velocity Readings}}{\text{Number of Readings}}$$

$$\text{(Imperial)} = \frac{185 + 189}{2} = 187.0 \text{ ft/min.}$$

$$\text{(Metric)} = \frac{3383 + 3456}{2} = 3420 \text{ m/hr}$$

$$\text{Flow rate for one filter} = \text{Conversion Factor} \times \text{Average Velocity}$$

$$\text{(Imperial)} = 2.40 \times 187.0 \text{ ft/min.} = 448.8 \text{ cfm}$$

$$\text{(Metric)} = .223 \times 3420 \text{ m/hr} = 763 \text{ m}^3\text{/hr}$$

$$\text{Total hood flow rate} = \text{(Filter 1 Flow Rate)} + \ldots + \text{(Filter x Flow Rate)}$$

$$\text{(Imperial)} = 448.8 + 457.8 + 437.5 + 444.8 = 1788.9 \text{ cfm}$$

$$\text{(Metric)} = 763 + 778 + 743 + 756 = 3040 \text{ m}^3\text{/hr}$$

Fig. 8

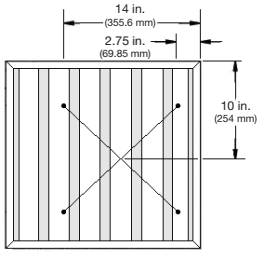

Fig. 9

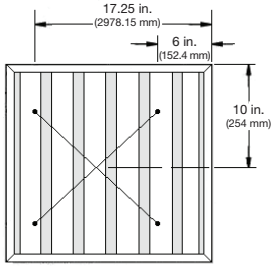

Fig. 10

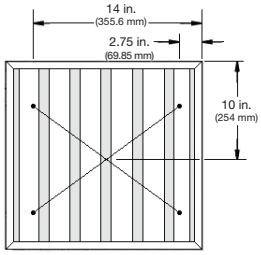

Grease-X-Tractor™ High Efficiency Filters or Grease Grabber™ Multi-Filtration System - Shortridge VelGrid Method

With all the filters in place, determine the total hood exhaust volume with a Shortridge meter as follows:

1. All cooking equipment should be on. If the hood has internal short circuit make-up air, it should be turned off.
2. Measure velocities
   - Set up the Shortridge meter. Leave all holes of VelGrid open. Do NOT tape over holes that are not over openings. The conversion factor takes this into account.
   - For 20 in. (500 mm) high filters, position the grid as shown in Fig. 16 and 17. Average the two measurements.
   - For 16 in. (400 mm) high filters position the grid as shown in Fig. 18.
   - For 20 in. (500 mm) wide filters, position the grid over the left and right side of the filter. Average the two measurements.
   - Take velocity readings for each filter.
3. Calculate each filter's volumetric flow rate as follows:

   Calculate each filter's average velocity by summing the velocity readings and dividing by the number of readings for each filter.

   Multiply the average velocity by the conversion factor to obtain the volumetric flow rate for each filter.
4. Calculate the hood's total volumetric flow rate by summing the volumetric flow rate of each individual filter in the hood as calculated in Step 3.

Nominal Filter Size (H x L)		Imperial Conversion Factor	Metric Conversion Factor
Inches	Millimeters		
16 x 16	400 x 400	1.78 ft^2	.165 m^2
16 x 20	400 x 500	2.34 ft^2	.217 m^2
20 x 16	500 x 400	2.26 ft^2	.210 m^2
20 x 20	500 x 500	2.96 ft^2	.275 m^2

NOTE

For best accuracy multiply the velocity of each filter by its conversion factor and sum the flow rates. Averaging the velocity measured for all filters may cause error.

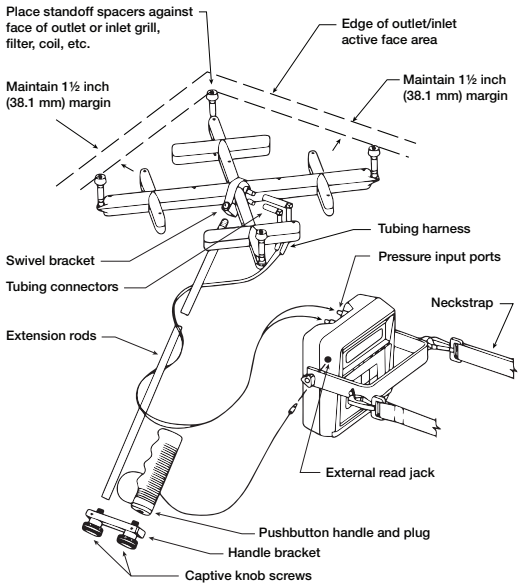

Example: Measured velocities for 20 x 20 in. (500 x 500 mm) filter.

$$\text{Average Slot Velocity} = \frac{\text{Sum of Velocity Readings}}{\text{Number of Readings}}$$

$$\text{(Imperial)} = \frac{198 + 205}{2} = \underline{201.5 \text{ ft/min.}}$$

$$\text{(Metric)} = \frac{3021 + 3749}{2} = \underline{3385 \text{ m/hr}}$$

$$\text{Flow rate for one filter} = \text{Conversion Factor} \times \text{Average Velocity}$$

$$\text{(Imperial)} = 2.96 \times 201.5 \text{ ft/min.} = \underline{596.4 \text{ cfm}}$$

$$\text{(Metric)} = .275 \times 3385 \text{ m/hr} = \underline{931 \text{ m}^3\text{/hr}}$$

$$\text{Total hood flow rate} = (\text{Filter 1 Flow Rate}) + \ldots + (\text{Filter x Flow Rate})$$

$$\text{(Imperial)} = 596.4 + 600.3 + 592.4 + 613.3 = \underline{2402.4 \text{ cfm}}$$

$$\text{(Metric)} = 931 + 1020 + 1006 + 1042 = \underline{3999 \text{ m}^3\text{/hr}}$$

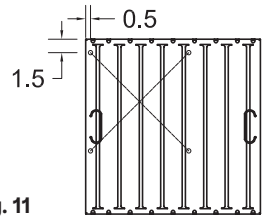

Fig. 11

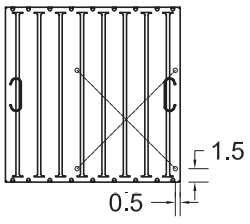

Fig. 12

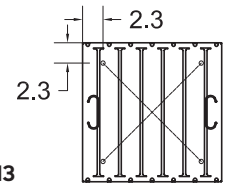

Fig. 13

External Supply Plenum - Shortridge VelGrid Method

1. Hood set up.

   Turn on both exhaust and supply air. If the make-up air unit has temperature control, it should be used to keep the supply air at the desired room discharge air temperature.

2. Measure velocities.

   Center the VelGrid along the width and begin 2" from either end as shown in Fig. 14. Maximize the number of readings along the length of plenum and record each.

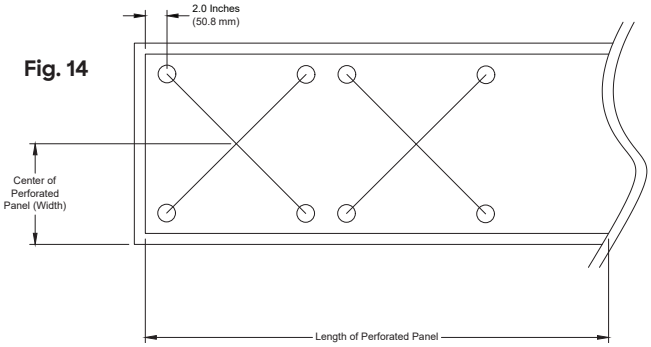

Fig. 14

3. Calculate the average velocity.
4. Measure the total length and width of the plenum.
5. Calculate the perforated panel supply air volume using the following formulas:

   For 14" and 18" wide supply plenums:

   - Air volume (CFM) = avg. velocity (fpm) x length (in.) x width (in.) x 0.62 / 144 (in^2/ft^2)
   - Air volume (m^3/hr) = avg. velocity (m/hr) x length (m) x width (m) x 0.62

   For 10" wide supply plenum sections:

   - Air volume (CFM) = avg. velocity (fpm) x length (in.) x width (in.) x 0.95 / 144 (in^2/ft^2)
   - Air volume (m^3/hr) = avg. velocity (m/hr) x length (m) x width (m) x 0.95

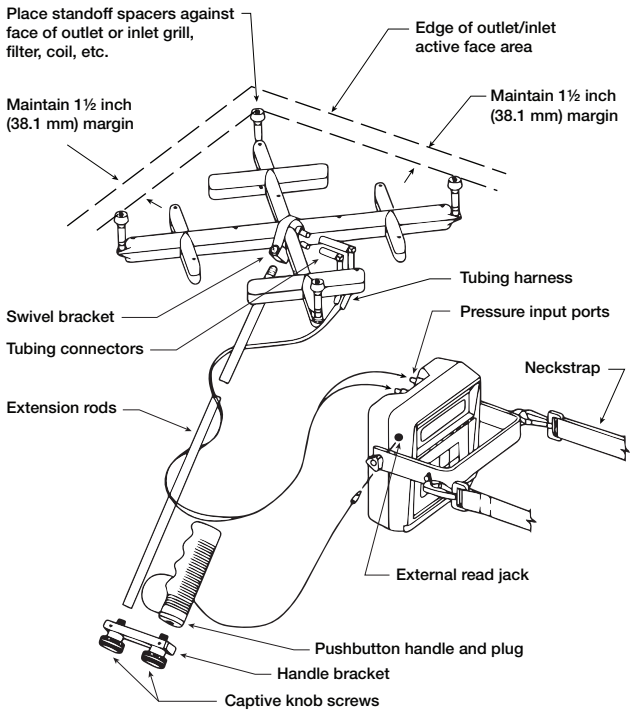

Example: 14" wide x 96" long (0.36 m x 2.44 m) air supply plenum

Position the shortridge and measure the velocity at a minimum of 5 locations along the length of the plenum.

Velocity measured at each location:

- Location 1: 204 fpm (3731 m/hr)
- Location 2: 202 fpm (3694 m/hr)
- Location 3: 208 fpm (3804m/hr)
- Location 4: 189 fpm (3456 m/hr)
- Location 5: 193 fpm (3530 m/hr)

Compute Average Velocity:

- English: (204+202+208+189+193)/5 = 199 fpm
- Metric: (3731+3694+3804+3456+3530)/5 = 3643 m/hr

Compute Air Volume of Plenum:

- English: 199 fpm x 96 in. x 14 in. x 0.62 / 144 in2/ft2 = 1152 CFM
- Metric: 3643 m/hr x 0.36 m x 2.44 m x 0.62 = 1984 m3/hr

Exhaust Air Balancing Baffles

This is a guide to assist in determining if multiple hoods on one fan can be balanced to have equal static pressure. For multiple hoods on one fan to achieve their designed exhaust flow, all of the hoods must have equal static pressure at their designed exhaust flow.

The laws of physics force the static pressure for each branch of a duct system on one fan to always be equal. This will happen by the flow rate increasing in low static branches and decreasing in high static branches until the static pressure is equal in all branches.

Checking for Balance

Every hood with exhaust air balancing baffles (EABB) has a range for its static pressure. The low static pressure number (when EABB is open) in this range is given by the standard calculation for hood static and is printed on the CAPS submittal page for that hood. The high static pressure number (when EABB is closed) in this range can be found by calculating the maximum potential increase of static and adding that value to the low static pressure number.

High static pressure number = low static pressure number + maximum increase

The maximum potential increase in static is given in the graph, or can be calculated from the following formula:

Maximum Increase = 0.00000036 x (Duct velocity)^2

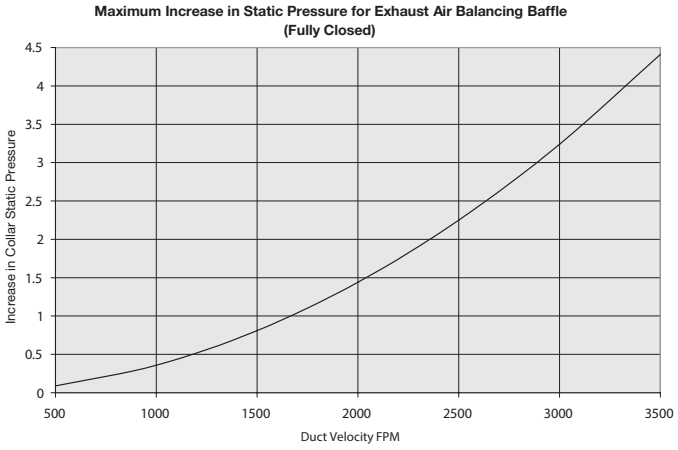

Step 1: Find the hood with the lowest static pressure as shown on the CAPS submittal pages.

Step 2: Calculate the high static pressure number for this hood as instructed above.

Step 3: Compare this high static pressure number to the low static pressure number of the remaining hoods. If the remaining hood's low static pressure number is lower than the high static pressure number calculated, then the system can be balanced; if the low static pressure number is higher than the calculated high static pressure number, then the system cannot be balanced.

Refer to the examples.

Example 1:

Hood 1: Ps = 0.58 in. wg
Duct Velocity = 1900 ft/min.

Hood 2: Ps = 0.44 in. wg
Duct Velocity = 1800 ft/min.

Hood 2 has the lower Ps, at 1800 ft/min. the maximum increase in Ps is 1.17. The range for Hood 2 is 0.44 to 1.61. Hood 1 is less than 1.61 so these hoods can be balanced.

Example 2:

Hood 3: Ps = 2.00 in. wg
Duct Velocity = 2000 ft/min.

Hood 4: Ps = 0.44 in. wg
Duct Velocity = 1500 ft/min.

Hood 4 has the lower Ps, at 1500 ft/min. the maximum increase in Ps is .81. The range for Hood 4 is 0.44 to 1.25. Hood 3 is higher than 1.25, so these hoods cannot be balanced.

NOTE

For many systems, exhaust air balancing baffles may not be needed on the hood that has the highest static pressure. The exception to this is if the individual ductwork has uneven static pressures.

NOTE

When sizing the fan, use the static pressure from the highest hood and sum the CFM from all the hoods.

Supply Manual Balancing Baffles

If the hood was provided with external supply plenums, the plenums may be equipped with manual balancing dampers located in the supply plenum collars. These can be used to regulate supply airflow between collars.

The adjustment is made on the outside of the collar. To adjust each blade:

1. Loosen the wing nut attached to the lever.
2. Move the lever to desired position.
3. Re-tighten the wing nut.

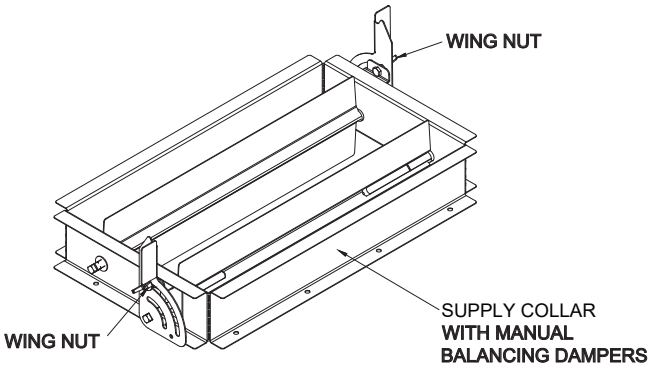

Wiring Diagrams

Amerex Wiring Plan View

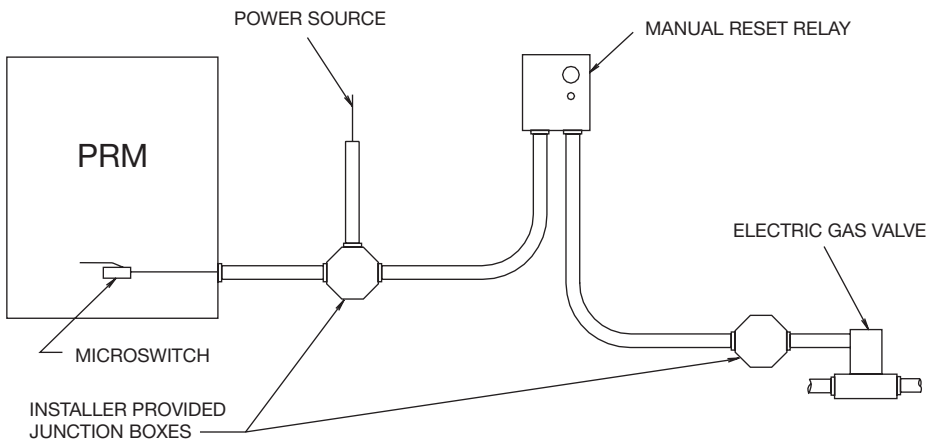

BASIC WIRING DIAGRAM

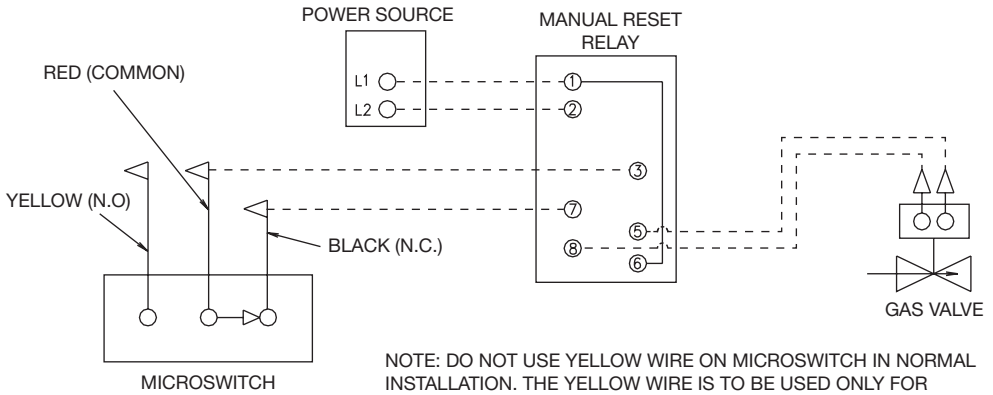

NOTE: DO NOT USE YELLOW WIRE ON MICROSWITCH IN NORMAL INSTALLATION. THE YELLOW WIRE IS TO BE USED ONLY FOR EXTINGUISHER ALARM, LIGHTS, CIRCUITS, ETC.

BASIC WIRING DIAGRAM

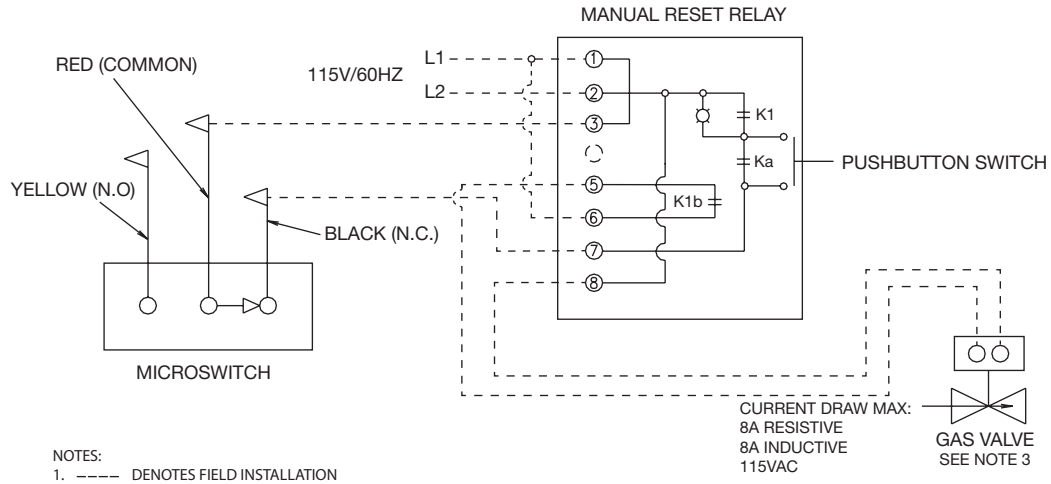

NOTES:
1. ---- DENOTES FIELD INSTALLATION
2. ——— DENOTES FACTORY INSTALLATION
3. GAS VALVE: UL LISTED ELECTRICALLY-OPERATED SAFETY VALVE FOR NATURAL OR LP GAS AS NEEDED OF APPROPRIATE PRESSURE AND TEMPERATURE RATING, 110V/60HZ OR AMEREX GAS VALVES, PN 12870, 12871, 12872, 12873, 12874, 12875 AND 12876.
4. K1a AND K1b ARE N.0. WHEN K1 IS DE-ENERGIZED.

Ansul Wiring Plan View

Snap-Action Switches may be wired as shown.
Typical examples shown.

Equipment

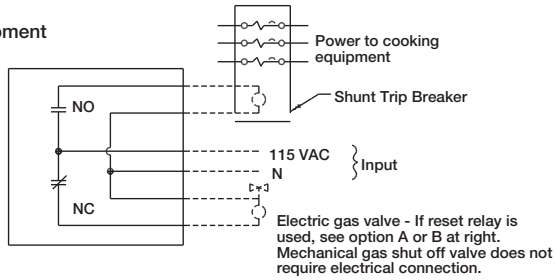

Alarms

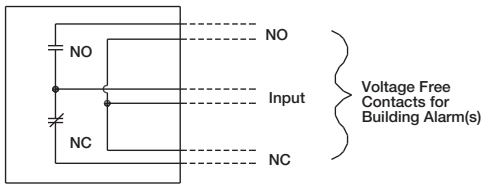

Fans

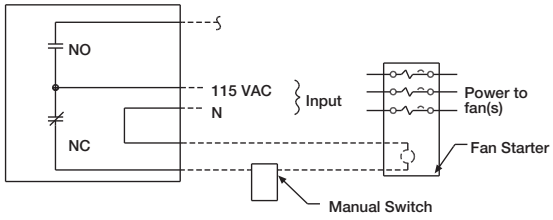

If prohibited by local codes, do not shut down exhaust fans with this method of wiring.

Manual Reset Relay
Part No. 426151

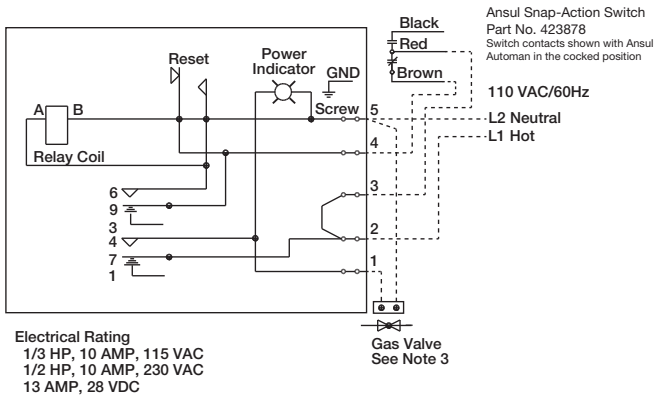

Electrical Rating
1/3 HP, 10 AMP, 115 VAC
1/2 HP, 10 AMP, 230 VAC
13 AMP, 28 VDC

Note:
1. ------ Denotes field installation.
2. —— Denotes factory installation.
3. Gas Valves: “UL Listed electrically-operated safety valve for natural or LP gas as needed, of appropriate pressure and temperature rating, 110V/60Hz” or Ansul gas valves.
4. Do not use black wire on snap-action switch in normal installation. Black wire may only be used for extraneous alarm, light circuits, etc.

Overall Wiring Plan View for Kitchen Systems with Make-Up Air Control Centers - Type I

In this arrangement, single-point power to the make-up air (MUA) unit is fed to each individual exhaust fan disconnect from exhaust fan starters within the MUA control center. This arrangement can be used for constant volume systems only. The diagram below is generic. To see your job specific wiring requirements, refer to the wiring diagrams provided with the package.

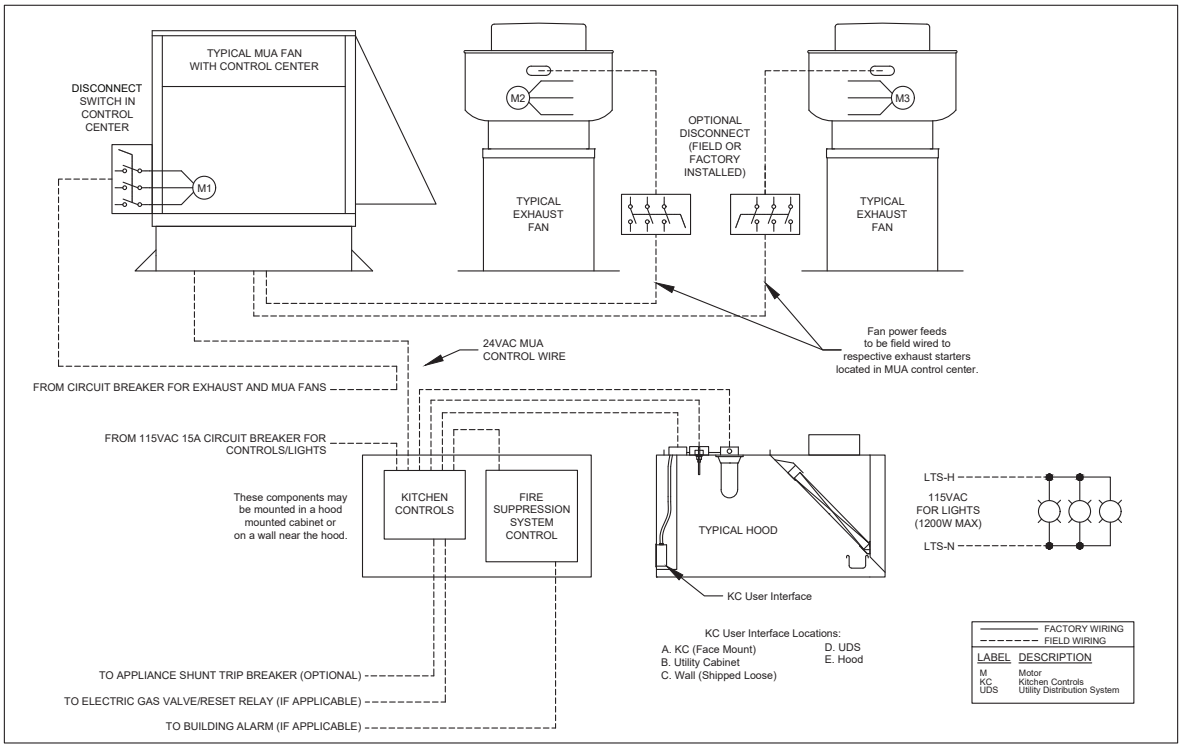

Overall Wiring Plan View for Kitchen Systems with Kitchen Fan Control Centers - Type I

This arrangement requires individual power connections for each supply and exhaust fan from remote circuit breakers through the fan starters in the Kitchen Fan Control Center or variable frequency drives in the Variable Volume Control Package. This arrangement can be used for either constant volume or variable volume systems. The diagram below is generic. To see your job specific wiring requirements, refer to the wiring diagrams provided with the package.

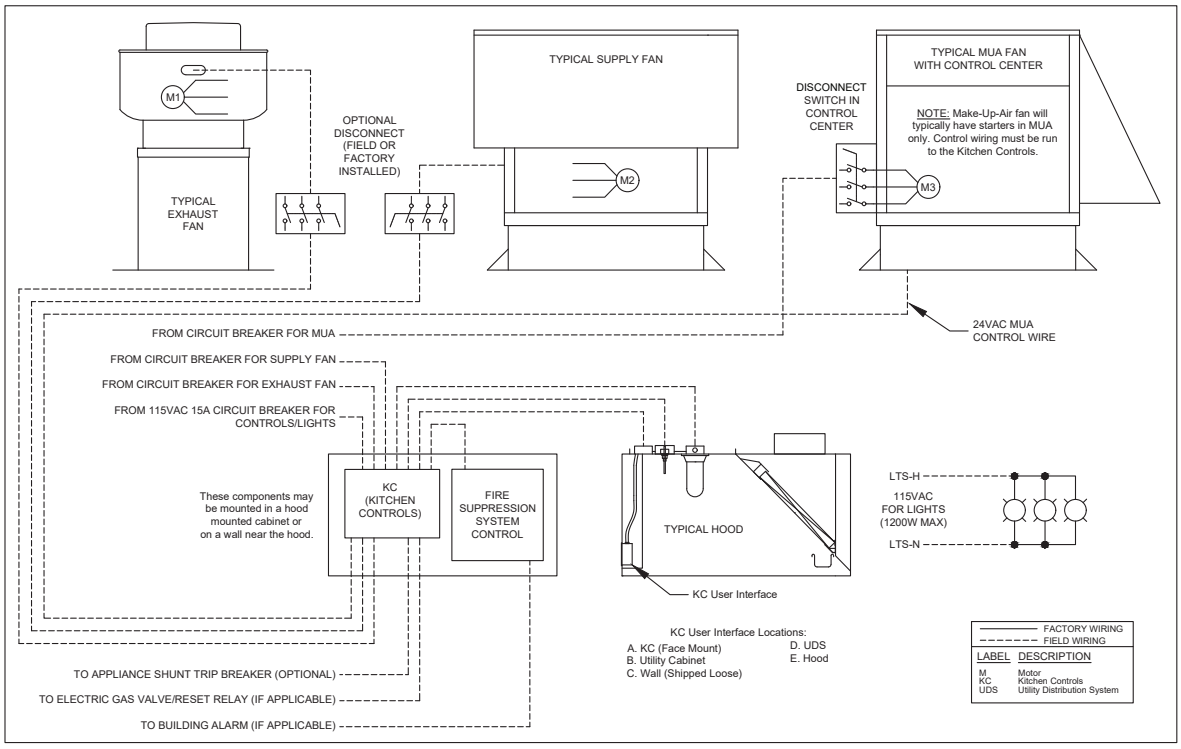

Overall Wiring Plan View for Switch Panels

The diagrams below show typical wiring for combined exhaust and supply switching when the switches are shipped loose for remote mounting, and for hood mounted switches.

The diagram shows how to wire the exhaust and supply fan starters to the switches and fire suppression contact. Typically, supply fans will be turned off and exhaust fans will be turned on (or continue to run) in the event the fire system is activated. The fire suppression micro-switch is provided as part of the fire suppression system and is normally mounted in the fire system control box.

NOTE

Wiring examples shown below can be used when a control panel is not provided as part of the hood system package.

Shipped Loose - Type I

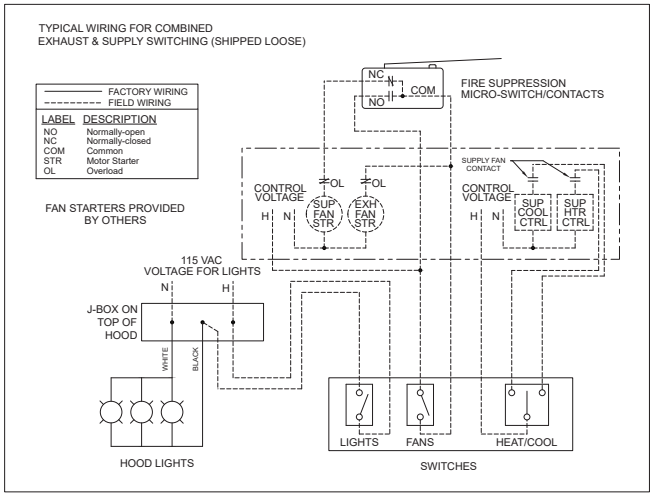

Hood Mounted - Type I

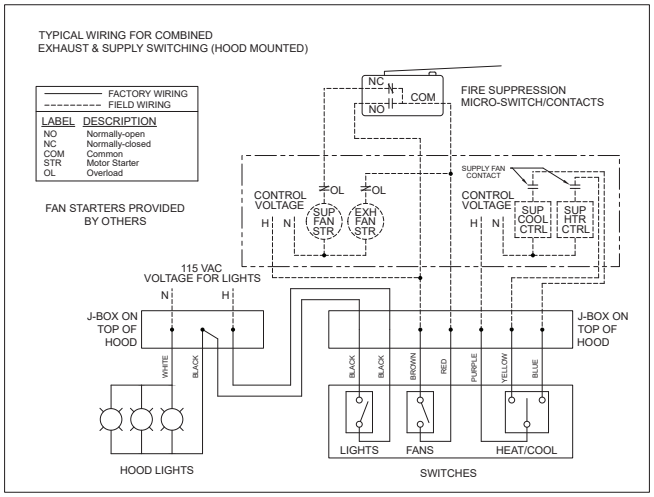

Shipped Loose - Type II

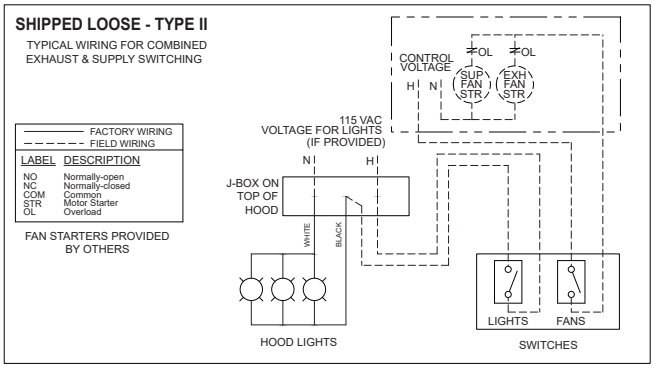

Hood Mounted - Type II

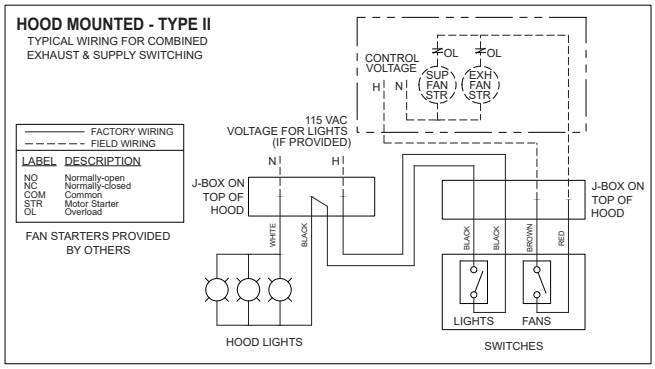

Circuit Diagrams

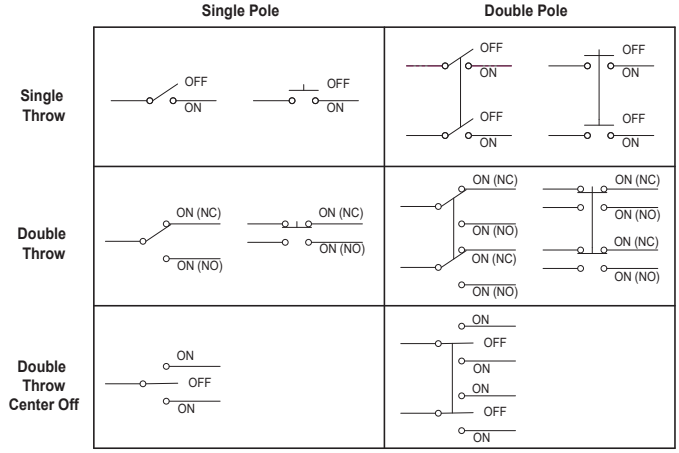

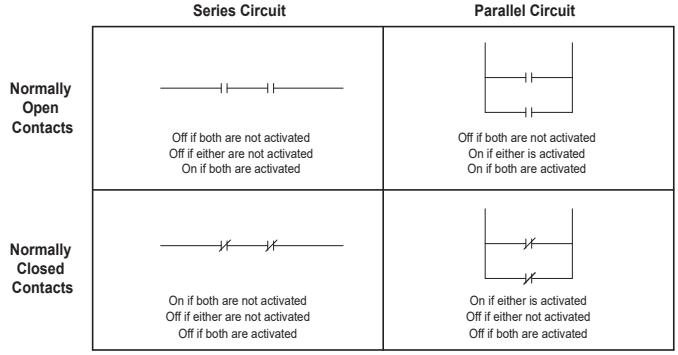

Maintenance

Daily Maintenance

1. Wipe grease from exposed metal surfaces on the hood interior using a clean, dry cloth.
2. Visually inspect the filters for grease accumulation.
3. Remove grease cups, empty contents and replace cup.

Weekly Maintenance

1. Remove the grease filters and wash in dishwasher or pot sink.

   Note: Filters installed over heavy grease producing equipment may require more frequent cleaning. See Filter Washing Frequency Guide, page 32.

2. Before replacing filters, clean the interior plenum surfaces of any residual grease accumulations.

Periodic Maintenance

1. Painted hood exterior surfaces should be cleaned with a mild detergent solution.
2. Stainless steel hood exterior surfaces should be cleaned with a mild detergent and then polished with a good grade stainless steel polish to preserve the original luster.

   Note: Never use abrasive cleaners or chemicals on hood surfaces. Never use chlorine based cleaners or iron wool pads to clean the hood. They may scratch or mar the material. Always rub with the grain of the stainless.

3. To maintain optimum performance of your hood and fan, duct cleaning should be performed as often as the application and code requires.
4. Recaulk the hoods with an NSF Approved silicone caulk, (GE SCS1009 or its equivalent) as needed.
5. Inspect the supply air discharge portion on external supply plenums to ensure the airstream is free from debris or other blockage.

Condensate Hood Baffle Installation, Fig. 15 and 16

1. Grasp the baffle with drain holes facing down and lift into the hood. For short hoods with only one baffle, it may be necessary to turn the baffle slightly diagonally to fit it past the drain channel.
2. After the baffle clears the drain channel of the hood, turn the baffle so it is lined up with the upper hanger in the hood.
3. Hook the upper channel of the baffle over the upper hanger of the hood and set the lower edge of the baffle into the condensate gutter. Repeat until all baffles are installed in the hood.
4. Center the baffle from side to side in the hood.

Fig. 15 - CORRECT

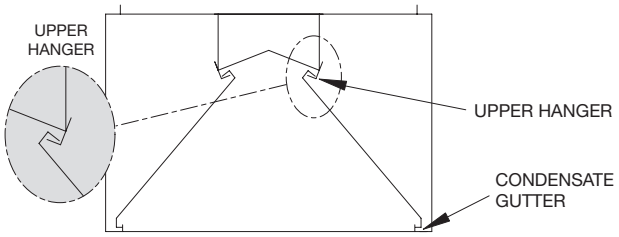

Fig. 16 - INCORRECT

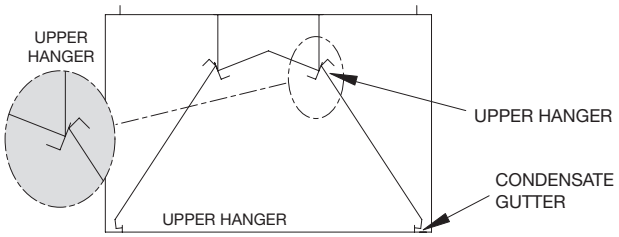

Air Diffusers

The air diffusers, located at the bottom of the back supply will need to be cleaned as often as the application dictates. Inspect periodically to determine the cleaning schedule.

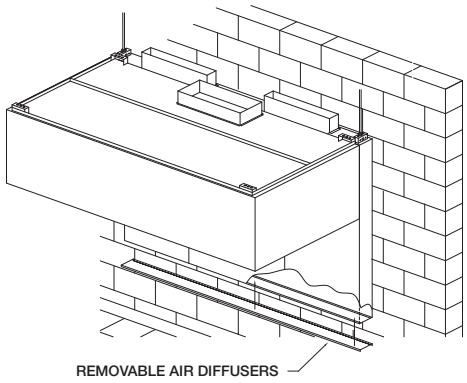

1. To clean the air diffusers, unfasten the screws. Remove the air diffusers from the back supply unit and wash in the sink or dishwasher.
2. Refasten with the stainless steel screws.

Grease Grabber™ Filter Installation

NOTE
Never install the second stage filter in the front filter channel. The second stage filter must be installed behind a UL Classified Grease-X-Tractor™ primary filter.

1. Slide the top edge of the second stage filter into the top rear filter channel; Fig. 17.

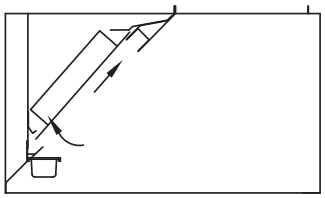

Fig. 17

2. Lifting the lower edge of the filter past the grease trough, continue to push the top of the filter into the channel.
3. When the filter is even with the bottom rear filter channel, set the filter into the channel; Fig. 18.

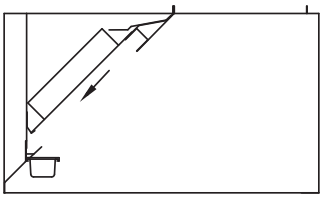

Fig. 18

4. Slide the filter to one end of the hood and repeat until all the filters are installed. Make sure the filters are placed tightly together with no visible gaps.

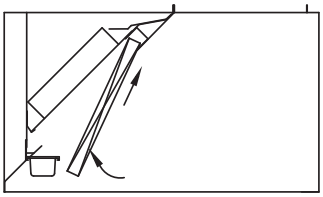

Fig. 19

5. Install the Grease-X-Tractor™ primary filters in the same manner using the front filter channel; Fig. 19.

Grease Grabber™ Filter Cleaning

Step 1 Remove the front row of Grease-X-Tractor™ filters shown in 1A. Begin by removing the middle filter(s) first (1B), then slide the outer filters toward the hood center and continue removing the filters.

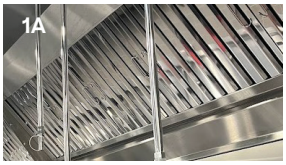

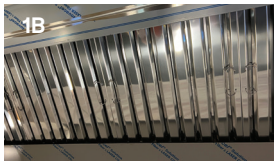

Grease-X-Tractor™ filters, first row of filters

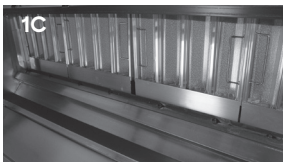

Grease Grabber™ filters, second row of filters

Step 2 Remove the Grease Grabber™ filters, starting in the middle of the hood: (2A) grab the handles on either side and lift the filter up, (2B) pull the bottom of the filter toward yourself, (2C) lower the filter out of the hood.

Repeat this process for each filter. The filters that are on the ends will have to be slid toward the middle and then lifted out.



Slide filter up



Pull bottom of filter towards yourself

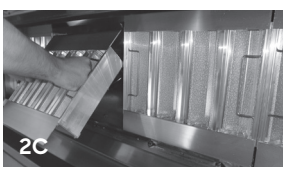

Pull filter down

Step 3 Frequent Maintenance

NOTE

Required washing frequency is dependent on type of cooking and quantity of food cooked.

- Remove filters from hood and place each filter in a whirlpool sink or dishwasher.
- If using a whirlpool sink, cycle for 10 minutes. Use standard dish wash soap. (3A)
- If using a dishwasher, cycle it three times to ensure all grease is removed. (3B)
- If using standard sink, cover with hot water and degreaser and soak for two hours. Rinse after soaking.

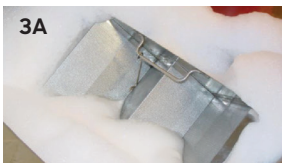

Whirlpool sink method

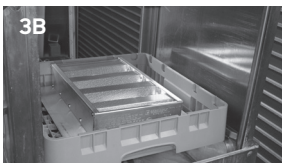

Dishwasher method

NOTE

For hoods with large quantities of filters, it is acceptable to wash three to four filters each day, cycling all of the filters in three days.

NOTE

The beads will discolor. Standard cooking will turn the beads yellow in color. Open flame cooking will cause the beads to blacken. Neither affects the performance of the filters.

Periodic Inspection

- Inspect filter fasteners. Verify they are not lose or missing.
- Each filter may be soaked in hot soapy water for two hours once a month prior to washing if grease build-up is found.
- Test for grease build-up by running water through the filter. If water runs freely and no air gaps are in the beaded pack, the filter is in working condition.
- Inspect the filters by holding it up to a light. Light shining through more than six holes in a group indicates filter damage.
- For filter replacement, call 1-800-438-8898

Step 4 Replace Grease Grabber™ filters in hood. Do Step 2 in reverse order (2C, then 2B, then 2A).

Step 5 Replace the front Grease-X-Tractor filters. Do Step 1 in reverse. Be sure to install filters in the ends of the hood first, then install the filters in the middle of the hood (1B, then 1A).

CAUTION

To prevent damage to filter media, do not wash second stage filters in detergents that contain hydroxides such as sodium hydroxide or potassium hydroxide.

Filter Washing Frequency Guide

NOTE

Standard cooking will turn the beads yellow in color. Open flame cooking will cause the beads to blacken. Neither affects the performance of the beads.

CAUTION

To prevent damage to filter media, do not wash second stage filters in detergents that contain hydroxides such as sodium hydroxide or potassium hydroxide.

Preference	Washing Equipment		Cooking Equipment	Chemical	Grease Grabber™ Filter		Baffle Filter or Grease-X-Tractor™ Wash Frequency
	Type	Temp.			Frequency Required	Time or Cycles	
1 Best	Commercial Grade Dish Washer	180° F Minimum	Griddle	Dish Washer Detergent	Every 3 days	2 cycles	Every 3 days, 2 cycles
			Fryer		Weekly	2 cycles	Twice a week, 1 cycle
			Charbroiler		Daily	2 cycles	Daily, 2 cycles
			Wok		Daily	2 cycles	Daily, 2 cycles
2	Low Temp. Dish Washer Chemical Sanitizer	140° F	Griddle	Dish Washer Detergent	Every 3 days	3 cycles	Every 3 days, 2 cycles
			Fryer		Weekly	3 cycles	Twice a week, 2 cycles
			Charbroiler		Daily	4 cycles	Daily, 2 cycles
			Wok		Daily	4 cycles	Daily, 2 cycles
3	Power Wash Sink (Whirlpool) with Heater	180° F Minimum	Griddle	Pot & Pan Detergent	Every 3 days	10 minutes	Every 3 days, 5 minutes
			Fryer		Weekly	10 minutes	Twice a week, 5 minutes
			Charbroiler		Daily	15 minutes	Daily, 5 minutes
			Wok		Daily	15 minutes	Daily, 5 minutes
4	Power Wash Sink (Whirlpool) without Heater	140° F	Griddle	Pot & Pan Detergent	Every 3 days	15 minutes	Daily, 5 minutes
			Fryer		Weekly	15 minutes	Twice a week, 5 minutes
			Charbroiler		Daily	25 minutes	Daily, 10 minutes
			Wok		Daily	25 minutes	Daily, 10 minutes
5	Pot Sink with Heater Rinse with sprayer after soaking.	180° F	Griddle	Pot & Pan Detergent and/or Degreaser	Every 2 days	1 hour	Daily Soak 10 minutes, then scrub with scour pad and bottle brush.
			Fryer		Every 2 days	1 hour	Daily Soak 5 minutes, then scrub with scour pad and bottle brush.
			Charbroiler		Daily	2 hours	Daily Soak 10 minutes, then scrub with scour pad and bottle brush.
			Wok		Daily	2 hours	
6 Worst	Pot Sink no Heater Rinse with sprayer after soaking.	140° F	Griddle	Commercial Grade Kitchen Degreaser	Daily	2 hours Change hot water every 30 minutes	Daily Soak 10 minutes then scrub with scour pad and bottle brush.
			Fryer		Every 2 days	2 hours Change hot water every 30 minutes	
			Charbroiler		Not Recommended		
			Wok		Not Recommended		

Troubleshooting

Problem: Exhaust fan is not operating or is not operating at design levels.	
Is the fan receiving power?	Replace fuses, reset circuit breakers, check disconnect.
Is the belt loose or broken?	Replace or tighten belt.
Is the fan rotating in correct direction?	Have the electrician correctly wire the fan.
Is the make-up air operating?	Problems with make-up air may interfere with the exhaust fan. Check the manufacturer's installation manual.
Does the airflow need to be increased?	Adjust or replace pulleys to increase fan RPM, install a larger motor.
Does the fan vibrate?	Clean the fan wheel/blade, replace fan wheel if damaged, check for loose bolts, check for broken or damaged components, check for rags and other foreign objects.

Problem: Hood is full of smoke. There is smoke coming out of the edges of the hood.	
Is the fan operating at design levels?	See exhaust fan troubleshooting section.
Is the fan correctly sized?	Refer to test and balance report, design specifications and fan curves; have an electrician check the motor amperage; try removing the filter temporarily to see if capture improves. (Make sure to replace filter to prevent risk of fire!); switch to different filters with lower static pressure.
Are the filters in good condition?	Clean filters, replace damaged filters, properly position filters.
Is there sufficient make-up air? *(Kitchen should be in a slight negative but not excessive. Check to see if there is a strong draft through an open door).*	Check make-up air unit, increase make-up air, make-up air should be evenly distributed throughout the kitchen.
Does the current cooking equipment match the original design?	Adjust or replace fan to match the cooking equipment load.
Are there multiple hoods on one fan?	One hood may be over exhausting and the other hood not drawing enough. Restrict second hood to help problem hood.
Are there closed dampers in the duct?	Open dampers.
Is the ductwork complex or too small?	Change to a higher static fan, modify the ductwork.
Is the ductwork obstructed?	Clear obstruction.
Problem: Smoke blows away before reaching the bottom of the hood.	
Are there cooling fans directed at the hood or cooking equipment?	Turn off or redirect fans.
Are there ceiling diffusers directing air at the hood?	Move diffusers to more neutral area or replace with a diffuser that directs air away from the hood.
Are there open windows or doors?	Close windows and doors.
Are there cross drafts or other drafts in the kitchen?	Find source of the draft and eliminate, add side skirts to hood (test with cardboard; use stainless for permanent side skirts); increase the amount of overhang on the spillage side; add a 6 in. (152.4 mm) lip around the base of the hood (test with cardboard; use stainless for permanent side skirts); make-up air should be spread out evenly through the kitchen.
Is the hood near a main walkway?	Add side skirts to hood (test with cardboard first); increase the amount of overhang on spillage side.
Are there pass-thru windows near the hood?	Adjust amount and locations of make-up air to eliminate drafts through the pass-thru windows.
Is this an air curtain hood?	Turn off or reduce the amount of make-up air.
Is the make-up air part of the hood or an attached plenum?	Try turning off or reducing the amount of make-up air; block off portions of the supply to direct air away from the problem area (test with cardboard).

Troubleshooting

Problem: Pilot lights are being blown out or cooking equipment is being cooled by make-up air.	
Are there drafts from make-up air?	Try turning off or reducing the amount of make-up air; block off portions of the supply to direct air away from the problem area (test with cardboard first); remove any obstructions in front of supply that directs air toward cooking equipment.

Problem: Cold air can be felt by the cook at the hood.	
Is this an air curtain hood?	Turn off or reduce the amount of air supplied to the air curtain; heat the supply air.

Problem: The kitchen gets hot.	
Is the hood capturing?	Hood is not drawing enough air, see sections on fan performance and hood capture.
Is this an air curtain hood?	Turn off or reduce the amount of air supplied to the air curtain.

Problem: Cooking odors in the dining area.	
Is the hood capturing?	Hood is not drawing enough air, see sections above on fan performance and hood capture.
Is there a draft through doors between the kitchen and dining area?	Decrease make-up air in the kitchen; increase exhaust air through hood.

Problem: Grease is running off the hood.	
Is there grease on top of the hood?	Exhaust duct is not correctly welded.
Is the caulk missing or damaged?	Clean problem area and recaulk.
Is the grease cup inserted properly?	Put grease cup back in place.

Problem: Hood is noisy.	
Is the fan running in the correct direction?	See exhaust fan troubleshooting section.
Are the filters in place?	Replace missing filters.
Is the hood over exhausting?	Slow down fan (see exhaust fan troubleshooting section)

Before calling your manufacturer's representative to report a problem, have the following information available:

1. Review / summary of troubleshooting section in installation operation manual.
2. Hood model and serial number.
3. Current cooking equipment line-up.
4. Size of hood (length, width and height).
5. Island or wall configuration.
6. Multiple hoods on one fan.
7. Nature of spillage (one end; all around the edges).
8. Does the smoke make it to the hood?
9. Height hood is mounted above finished floor.
10. How make-up air is brought into the kitchen (hood, ceiling diffusers, separate plenum).
11. Is exhaust system controlled by a variable volume system?
12. Is the fan noisy?
13. Photos or videos of the issue/problem may be helpful.

Replacement Parts

FILTERS	
Part Number	**Filter Description (Height x Width x Depth, in inches)**
483228	16 x 16 x 2 Stainless Steel Baffle Filter
483229	16 x 20 x 2 Stainless Steel Baffle Filter
483230	20 x 16 x 2 Stainless Steel Baffle Filter
483231	20 x 20 x 2 Stainless Steel Baffle Filter
1036738	16 x 16 x 2 Grease-X-Tractor™ SS Filter
1036746	16 x 20 x 2 Grease-X-Tractor™ SS Filter
1036742	20 x 16 x 2 Grease-X-Tractor™ SS Filter
1036734	20 x 20 x 2 Grease-X-Tractor™ SS Filter
852881	16 x 16 Grease Grabber™ Second Stage Filter
852880	16 x 20 Grease Grabber™ Second Stage Filter
852879	20 x 16 Grease Grabber™ Second Stage Filter
852878	20 x 20 Grease Grabber™ Second Stage Filter

REGISTERS	
Part Number	**Description**
452700	24 x 8 Aluminum Single Deflection H-OB
452701	36 x 8 Aluminum Single Deflection H-OB
452702	36 x 8 Aluminum Single Deflection H-OB
452703	44 x 8 Aluminum Single Deflection H-OB
453796	24 x 12 Aluminum Single Deflection H-OB
453797	36 x 12 Aluminum Single Deflection H-OB
453798	38 x 12 Aluminum Single Deflection H-OB
453799	44 x 12 Aluminum Single Deflection H-OB
452729	24 x 8 Aluminum 38° Fixed Blade RA-OB
452730	30 x 8 Aluminum 38° Fixed Blade RA-OB
452731	36 x 8 Aluminum 38° Fixed Blade RA-OB
452732	38 x 8 Aluminum 38° Fixed Blade RA-OB
452733	44 x 8 Aluminum 38° Fixed Blade RA-OB

SWITCHES	
Part Number	**Description**
850551	Light Switch Only
851776	Fan Switch Only
851777	Light Switch & Fan Switch (2 switches)
851778	Fan Switch & Heat Switch (2 switches)
851779	Exhaust, Fan & Supply Switch (2 switches)
851780	Light, Fan & Heat Switch (3 switches)
851781	Light, Exhaust, Supply Separate Switch (3 switches)
851782	Exhaust, Supply, Heat Separate Switch (3 switches)
851783	Light, Exhaust, Supply, Heat Separate Switch (4 switches)
851784	Fan Switch & Temper (3 position) (2 switches)
851510	Light, Fans, & Temper (3 position) (3 switches)
851511	Exhaust, Supply, & Temper (3 position) (3 switches)
851512	Light, Exhaust, Supply, & Temper (3 position) (4 switches)
851618	Automatic Fire Damper Test Switch

MISCELLANEOUS	
Part Number	**Description**
451131	Grease Cup
453498	Glass Globe for hood lights (clear)
1037561	Grease Extractor Filter Removal Tool
851834	Baffle Filter Removal Tool
483765	Hood 8-inch Round LED Light (LED-80-20DN)
385648	ASP 3.4-inch LED Light
384925	Hood Temp Sensor Only
484000	Hood Temp Sensor Compression Seal Only

Installation / Start-up Checklist

Initial Unit Check (pg. 5)

☐ Check AHJ clearance requirements for hood

☐ Verify enough clearance for accessories

☐ All hood accessories are accounted for

☐ Check for damage on hood and all accessories

Single Island Canopy Hood Installation (pg. 5-6)

☐ Hood tipped on side onto protective material

☐ Hanging height recorded (UL label for details)

☐ Filler panels installed (if equipped, shipped loose)

☐ Temperature sensors installed

☐ Duct collars attached (if shipped loose)

☐ Back supply plenum (BSP) installed (if equipped)

☐ Exhaust duct connected to hood

☐ Hang hood properly

☐ Continuous capture options installed (if equipped)

☐ Air supply plenums (ASP/SSP) installed (if equipped)

☐ Remainder of ductwork installed

☐ Backsplash/Sidesplash panels installed (if equipped)

☐ End Skirts installed (if equipped)

☐ Fire system installed (if equipped)

☐ Controls installed and wired (if equipped)

☐ Enclosure panels installed (if equipped)

☐ Filters and/or baffles installed properly

☐ Grease cup(s) installed

☐ Lights installed and power to lights (if equipped)

☐ Remove remainder of protective plastic sheeting

☐ Appliances installed in proper positions beneath the hood (according to submittal drawings)

Double Canopy Hood Installation (pg. 14)

☐ Follow instructions for Single Island Canopy Hood

☐ Both hoods are installed back to back

☐ Both hoods have been leveled

☐ Rear mounting brackets tack-welded or bolted

☐ U-Channel installed to seal seam (if provided)

☐ Connected inside edges caulked

Proximity & Crossover Hood Installation (pg. 14)

☐ Hanging height recorded (UL label for details)
- Different heights than canopy hoods

☐ Studs located in wall

☐ Holes drilled into hood mounting flange

☐ Hood lifted into place and lag bolted to wall

☐ Threaded rod bolted to remaining hanging brackets

☐ Threaded rod fastened to ceiling supports

☐ Hood leveled

☐ Plate shelf with duct enclosure installed (if equipped)
- Ensure ductwork is attached, fire system installed, and electrical connections are completed before attaching enclosures

Before Start Up (pg. 15-20)

☐ Balance exhaust system CFM between dining room and kitchen

☐ Turn on all cooking appliances and test hood air volume with filters in place

☐ Adjust balancing baffles to regulate airflow

Wiring (pg. 21-24)

☐ Ensure all wiring is properly connected within each kitchen ventilation system

☐ *Controls IOM* has been followed for ALL equipped controls within the entire system

ACCUREX®

P.O. Box 410 Schofield, WI 54476
Phone: 800.333.1400 • Fax: 715.241.6191
Parts: 800.355.5354 • accurex.com

470399 · Kitchen Hoods, Rev. 24 November 2026
© 2026 Accurex, LLC