Installation, Operation and Maintenance Manual

Please read and save these instructions for future reference. Read carefully before attempting to assemble, install, operate or maintain the product described. Protect yourself and others by observing all safety information. Failure to comply with these instructions will result in voiding of the product warranty and may result in personal injury and/or property damage.

General Safety Information

Only qualified personnel should install this system. Personnel should have a clear understanding of these instructions and all applicable local and national building and fire codes. Personnel should be aware of general safety precautions. SMACNA guidelines should be followed for hanging and supporting the hood. If more information is needed, contact a licensed professional engineer before moving forward.

DANGER

Always disconnect power before working on or near a unit. Lock and tag the disconnect switch or breaker to prevent accidental power up.

NOTE

Follow all local electrical, plumbing and safety codes, as well as the National Electrical Code (NEC) and the latest edition of the National Fire Protection Agency Standard for Ventilation Control and Fire Protection of Commercial Cooking Operations, (NFPA 96). Follow the Canadian Electrical Code (CEC) and ULC-S650 if installing this product in Canada.

Receiving

Upon receiving the product, check to ensure all items are accounted for by referencing the delivery receipt or packing list. Inspect each crate or carton for shipping damage before accepting delivery. Alert the carrier of any damage detected. The customer will make a notation of damage (or shortage of items) on the delivery receipt and all copies of the bill of lading which is countersigned by the delivering carrier. If damaged, immediately contact your Accurex Representative. Any physical damage to the unit after acceptance is not the responsibility of Accurex, LLC.

Unpacking

Verify that all required parts and the correct quantity of each item have been received. If any items are missing, report shortages to your local representative to arrange for obtaining missing parts. Sometimes it is not possible that all items for the unit be shipped together due to availability of transportation and truck space. Confirmation of shipment(s) must be limited to only items on the bill of lading. Filters are shipped on a separate skid in their original packaging. Do not remove factory packaging or install filters until just prior to commissioning. Remove all other shipping/packing materials.

Handling

Units are to be rigged and moved by the lifting brackets provided or by the skid when a forklift is used. Location of brackets varies by model and size. Handle in such a manner as to keep from scratching or denting. Damaged finish may reduce ability of unit to resist corrosion.

Storage

Units are protected against damage during shipment. If the unit cannot be installed and operated immediately, precautions need to be taken to prevent deterioration of the unit during storage. The user assumes responsibility of the unit and accessories while in storage. The manufacturer will not be responsible for damage during storage.

The ideal environment for storage of the hood and accessories is indoors, above grade in a clean, dry atmosphere that is sealed from the elements. While in storage, inspect equipment routinely. If any moisture, dirt or other accumulations are found on the hood or any of the parts, the source should be located and eliminated.

Removing from Storage

As equipment is removed from storage to be installed in their final location, it should be protected and maintained as outlined in the Handling section above.

Table of Contents

General Safety Information 1
Receiving/Unpacking/Handling 1
Storage/Removing from Storage 1
Auto Scrubber Hood Function. 2
System Components
Hood. 3
Kitchen Controls (KC) Cabinet 3
Backflow Preventer 3
User Interface 3
Hood Weights 3
Supply Plenum Weights and Dimensions 4
Prior to Installation. 4
Unpacking 4
Hood Installation Overview 5-6
Filler Panel Installation 6
Clearance Reduction Method 6-7
Top Clearance Reduction Options 6
Back and Front Clearance Reduction Options . . . 7
End Clearance Reduction Method 7
Installing Duct Collars
Exhaust Duct Collars 7
Supply Duct Collars to the Plenum 7
Installing Back Supply Plenum 8
Ductwork
Exhaust/Supply 8
Continuous Capture Plenum Hoods. 8
Installing External Supply Plenums 9
Using Uni-Strut 9
Using Hanger Brackets and Threaded Rod. 9
Installing the Supply Duct Collar to the Plenum . . 9
Installing Backsplash / Side Splash Panels 10
Installing End Skirts 11
Plumbing
Connections 12
Detergent Tank Installation 12
Detergent Requirements 12
Preventative Maintenance. 12
Typical Plumbing Connection Layout 13
Electrical Connections
Wiring 14
Power for Hood Controls/Lights. 15
HCB Fire System Dry Contacts 15
HCB Power for Gas Valve 15
HCB Fire Suppression Fire System Switch 15
HCB Room Sensor 16
HCB Hood and Supply Temp Sensors 16
HCB Digital Inputs 17
HCB Network Connections 17
Smoke Sensor Receiver Connection 18
Hood Enclosure Electrical Connection Checklist . . .19
Installing Ceiling Enclosure Panels 20
Double Island Canopy Style Hoods 21
Initial System Start-Up. 21
System Operation
Fan Operation 22
Hood Light Operation 22
Wash Operation 22
Wash Sequence of Operation 23
Balancing the Kitchen Exhaust System 24
Testing Hood Air Volume. 25
Additional Wiring Schematics
Ansul® and Amerex® Wiring Plan View 26
Maintenance 27
Troubleshooting 28-30
Parts List 31
Our Commitment. . . . . Backcover

Auto Scrubber Hood Function

Accurex's Auto Scrubber hoods are designed for three primary functions:

- Capture and contain the effluent produced by the cooking process.
- Remove grease and other contaminants from the airstream with either one or multiple stages of mechanical filters.
- Wash the filters and other surfaces within the exhaust plenum to remove contaminants.

NOTE

The wash sequence of the hood is not designed for fire suppression and will not engage in the event of a fire.

NOTE

For information on the complete wash cycle, please refer to the Wash Sequence of Operation, page 23.

System Components

Hood

The hood is shipped from the factory pre-piped and ready to install. All wash components within the hood are complete and ready for connection to hot water, sanitary sewer drain and the electrical sources. If the Auto Scrubber Control Panel is mounted on the hood, wiring from the control panel to the hood lights, valves and sensors is completed by Accurex. All field plumbing and wiring must conform to plumbing and electrical codes.

Kitchen Controls (KC) Cabinet - *"Advanced" Configuration*

The control cabinet contains the water and electrical components that controls the wash sequencing and operations. The control cabinet also includes the detergent reservoir, detergent pump, and other water piping.

NOTE

Filters are shipped loose with the hood and installed in the field. To install the filters, perform the sequence of steps outlined on page 25 in reverse.

Backflow Preventer

A backflow preventer will be shipped loose with the KC cabinet and will need to be installed in-line with the hot water supply to the KC cabinet to prevent detergent from back-feeding into the building water supply. Plumbing instructions begin on page 12.

User Interface

The user interface will be a full color touchscreen. The main board (MB) user interface will be either shipped loose, or face mounted on the door of the control enclosure inside the cabinet. The hood control board (HCB) user interfaces will mounted on the face of the hood, or on the end of the hood-mounted utility cabinet, or shipped loose. The MB user interface can be used to view and adjust wash settings for all hoods on the system. The HCB user interface provides a "Wash" button for starting/stopping a hood wash manually (default). Both MB and HCB user interfaces also provide fault information if present, both visually and audiably (buzzer sounds in 1 second intervals).

NOTE

For detailed information on the Kitchen Controls (KC), please refer to the Accurex website, accurex.com

Hood Weights

Hood Depth (Multiply Second Value by Length, then add First Value for Hood Weight)*							
Hood Model	**4 feet 1.219 m**	**4.5 ft. 1.372 m**	**5 ft. 1.524 m**	**5.5 ft. 1.676 m**	**6 ft. 1.829 m**	**6.5 ft. 1.981 m**	**7 ft. 2.134 m**
XWAE-B	33 lbs + 99 lbs/ft 15 kg + 147 kg/m	33 lbs + 111 lbs/ft 15 kg + 165 kg/m	33 lbs + 123 lbs/ft 15 kg + 183 kg/m	33 lbs +135 lbs/ft 15 kg + 201 kg/m	33 lbs + 147 lbs/ft 15 kg + 219 kg/m	33 lbs + 159 lbs/ft 15 kg + 237 kg/m	33 lbs + 171 lbs/ft 15 kg + 254 kg/m
XWAE-X	26 lbs + 102 lbs/ft 12 kg + 152 kg/m	26 lbs + 114 lbs/ft 12 kg + 170 kg/m	26 lbs + 126 lbs/ft 12 kg + 188 kg/m	26 lbs + 138 lbs/ft 12 kg + 205 kg/m	26 lbs + 150 lbs/ft 12 kg + 223 kg/m	26 lbs + 162 lbs/ft 12 kg + 241 kg/m	26 lbs + 174 lbs/ft 12 kg + 259 kg/m
XWAE-G	23 lbs + 104 lbs/ft 10 kg + 155 kg/m	23 lbs + 116 lbs/ft 10 kg + 173 kg/m	23 lbs + 128 lbs/ft 10 kg + 190 kg/m	23 lbs + 140 lbs/ft 10 kg + 208 kg/m	23 lbs + 152 lbs/ft 10 kg + 226 kg/m	23 lbs + 164 lbs/ft 10 kg + 244 kg/m	23 lbs + 176 lbs/ft 10 kg + 262 kg/m

** Hood weight calculations are based on standard selection. Hood height, accessories and material gauge affect overall hood weight.*

CAUTION

To ensure proper structural support, all hanger brackets must be used for hanging the hood.

Supply Plenum Weights and Dimensions

External Supply Plenum Type	Width		Height		Length per section		Weight*	
	in.	mm	in.	mm	ft.	m	lbs/ft	kg/m
Air Supply Plenum (ASP)	14	355.6	4	101.6	3 to 12	0.9 to 3.7	7.8	5.2
	18	457.2	4	101.6	3 to 12	0.9 to 3.7	8.7	5.8
Split Supply Plenum (SSP)	24	609.6	4	101.6	3 to 12	0.9 to 3.7	14.1	9.5
	28	711.2	4	101.6	3 to 12	0.9 to 3.7	15.1	10.1
Back Supply Plenum (BSP)	6	152.4	Variable	Variable	3 to 16	0.9 to 4.9	35.0	52.1

*Does not include all options and accessories

Prior to Installation

Prior to installation, check with the Authorities Having Jurisdiction (AHJ) on clearance requirements to structures surrounding the hood and other equipment. Verify there is enough space to safely lift the hood up into its operating position and enough clearance around the hood for components like fire system connections, hood lights, hood control components, plumbing connections, etc. Consider access for servicing the equipment and the different components when locating the hood.

The UL label located on the end panel on the inside of the hood will provide pertinent information regarding the hood installation. Information includes:

- Allowable cooking surface temperatures of the cooking equipment
- Front and side overhang requirements
- Minimum exhaust airflow requirements
- Hood lights load information and restrictions
- Filter information
- Fire damper fusible link replacement information, if applicable

Unpacking

Carefully remove the top of the crate and set aside all accessories in the crate such as backsplash panels, control packages, and boxes with loose parts. When removing the hood from the crate, place protective material on the floor next to the crate to avoid damaging the hood.

Lift the hood only by utilizing the hanger brackets. Make sure the hood weight is evenly distributed. Slowly lift the hood out of the crate and place on the protective material.

NOTE

If using straps, the straps should not interfere with plumbing on the top of the hood in an effort to prevent internal piping damage which could cause future leaks.

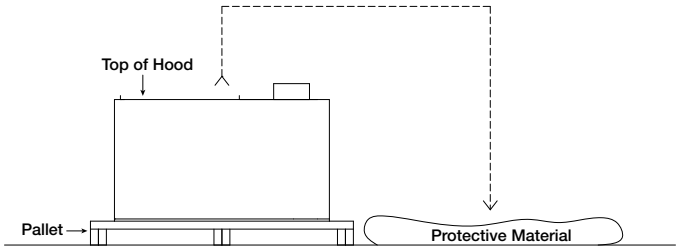

Hood Installation Overview

1. If the hood is provided with filler panels, shipped loose, install them now. See page 7, Filler Panel Installation. Filler panels may be integral to the hood, which requires no additional installation.
2. If the hood is equipped with Clearance Reduction Methods, refer to pages 7 and 8 for special considerations with hanging the hood.
3. If the hood is provided with hood/duct sensors or thermostats that were shipped loose, install them now. See the Installation and Operations guide provided with the control panel.
4. If the hood was provided with either exhaust collars or supply collars that have shipped loose, it is recommended that the exhaust and supply openings are cut and collars are attached now, prior to hanging the hood. See Installing Duct Collars on page 8.
5. If the hood is provided with a back supply plenum (BSP) install it now. See page 9, Installing the Back Supply Plenum.
6. If possible, connect (weld) exhaust duct to the hood while on the floor, unless it prohibits the hood from being raised into place. For information on ductwork, see page 9, Ductwork.
7. At this point, drill holes in the building structural support system or utilize uni-strut to match up with the hanger bracket holes. Then slowly and evenly raise the hood into position and insert 1/2-inch (12.7 mm) diameter threaded rod (provided by others) between the hanger brackets and structure.

   The hood hanging height requirements are given on the UL label. Typical canopy hood hanging height will be 80 inches (203.2 cm) off the finished floor (to the front lower edge of the hood).

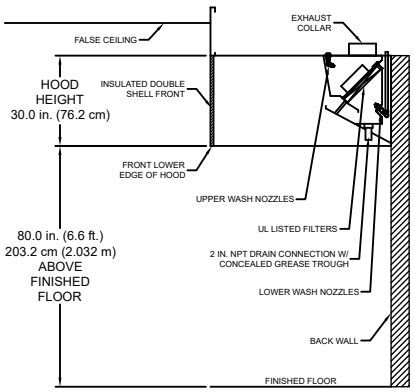

HOOD SECTION VIEW

NOTE

If the hood is supplied with ceiling enclosure panels, the height of the enclosures will typically be the distance from the ceiling to the top of the hood. Use this dimension to find the hood's hanging height off of the floor.

For questions regarding the supporting structure and its integrity, either the contractor or structural engineer needs to be consulted.

NOTE

All hanger brackets MUST be used and the hood must be properly supported while lifting to prevent damage or distortion to the hood.

NOTE

The hood MUST be hung evenly. If hung unevenly, this may cause grease drainage problems. Provide additional support if necessary so that the hood doesn't move in manner that is acceptable with the Authorities Having Jurisdiction (AHJ).

WARNING

When mounting the hood or any components against the hood, never puncture or drill into the canopy. This will void the hood listing and warranty.

8. If the hood was provided in sections with the continuous capture option, once each hood section is hung, install this option now. See page 9, Continuous Capture Plenum Hoods.
9. If the hood was provided with any front or side external supply plenums (other than the back supply plenum), install these now. See page 10, Installing Front/Side External Supply Plenums.
10. Install the remainder of both the exhaust and supply ductwork. For further guidelines see page 9, Ductwork.
11. If the hood is provided with any backsplash/ sidesplash panels, install them now. See page 11, Installing Backsplash Panels.
12. If the hood is provided with any end skirts, install them now. See page 11, Installing End Skirts.
13. This is a Type I hood and it requires a fire suppression system. Once the hood(s) and ductwork are fully installed, appliance(s) are in place and walls are complete, the fire system should be completed.

    If the hood is provided with a full factory-coordinated fire suppression system installation, the certified fire system installer should be contacted at this time to complete the final hookups, testing and system certification based upon manufacturer's specification and local fire codes.

    If the hood is equipped with pre-piping only, and/ or does not include fire suppression, it is the responsibility of a certified fire system installer to install, test and certify the system based upon manufacturer's specification and local fire codes.

Hood Installation Overview, *continued*

14. The kitchen controls (KC) cabinet, if shipped loose, will need to be installed at this time. Once mounted, plumbing and electrical wiring will need to be completed by the jobsite plumber and electrician. Job specific wiring diagrams and installation and operations manual will be provided with the KC panel. Otherwise, typical hood plumbing details are given on pages 12-13, and typical hood electrical wiring details are provided on pages 14-19.
15. If the hood is provided with enclosure panels, install them now. See page 20, Installing Enclosure Panels.
16. Install the rest of the hood accessories provided. This may include grease filters light bulbs (provided by others unless hood has round LED light fixtures), light globes, and trim strips.

It is recommended that the protective plastic sheeting remain on the hood until fully installed to better protect the product from scratching and marking. Once removed, use stainless steel polish, such as BlueAway or equivalent, to clean the hood and/or remove marks or discoloration. Be sure to wipe with the grain and not against it.

Filler Panel Installation

1. Uncrate the hood and lay it on the floor with protective material between the hood and the floor.
2. Bolt the filler panels together with 5/16 in. bolts provided in the hardware package.
3. Position the filler panels to the hood back, and tack-weld them into place.

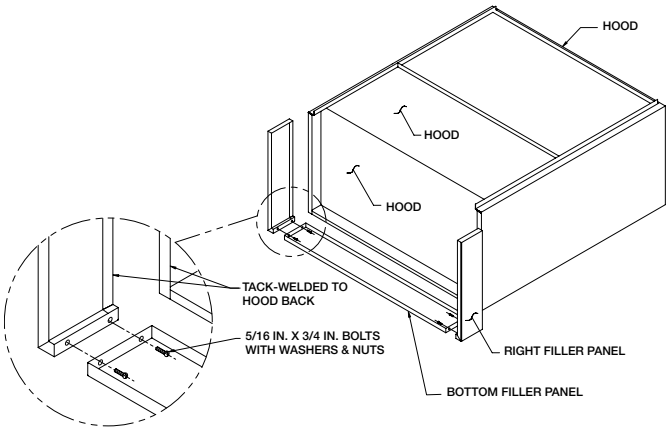

4. To allow for ease of cleaning, caulk the external seams with NSF Approved silicone caulk (GE SCS1009, or its equivalent). The caulk is not provided.

Clearance Reduction Methods

Clearance reduction methods have been evaluated and tested and are listed by UL (Underwriters Laboratory). The method of test was derived from the UL 710 test standard.

The hood may be installed with zero clearance to combustible materials if constructed in the following manner.

1. One inch (2.54 cm) thick layer of insulation of Owens Corning® Type 475, Johns Manville Type 475, IIG® MinWool-1200® Flexible Batt, or Knauf Insulation Type EI 475.
2. Insulation must be held securely in place. Pins that are welded or secured with an adhesive may be used.
3. A backsplash panel must be attached to the wall (insulated or uninsulated).

To comply with the UL Listing, the cooking appliances must be as follows:

- Maximum surface temperature is 700°F (371°C)
- Appliances are located at least 3 in. (7.62 cm) from the rear wall
- Appliances are at least 40 in. (101.6 cm) below the bottom front edge of the hood

The hood may be installed with 3 in. (7.62 cm) clearance to limited combustible materials per NFPA 96 if constructed in one of the following methods:

- 3 in. (7.62 cm) rear uninsulated stand-off
- 3 in. (7.62 cm) top enclosure panel system
- 3 in. (7.62 cm) end uninsulated stand-off

Top Clearance Reduction Options

One inch (2.54 cm) layer of insulation installed on top of the hood (optional) meets zero inch requirements for clearance to combustible surfaces as outlined under the clearance reductions methods.

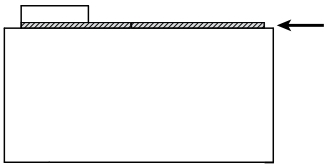

Three inches (7.62 cm) uninsulated airspace installed on top of hood (optional) meets NFPA 96 requirements for clearance to limited combustible surfaces.

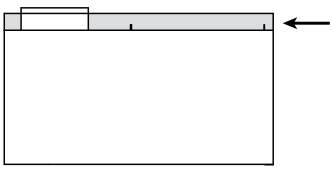

Back and Front Clearance Reduction Options

One inch (2.54 cm) layer of insulation in 1 in. (2.54 cm) back stand-off meets zero inch requirements for clearance to combustible surfaces as outlined under the clearance reduction methods.

Three inches (7.62 cm) uninsulated back stand-off meets NFPA 96 requirements for clearance to limited combustible surfaces.

One inch (2.54 cm) layer of insulation factory-installed on the front of the hood (optional) meets zero inch requirements for clearance to combustible surfaces.

HOOD SECTION VIEW WITH FRONT AND REAR ZERO CLEARANCE

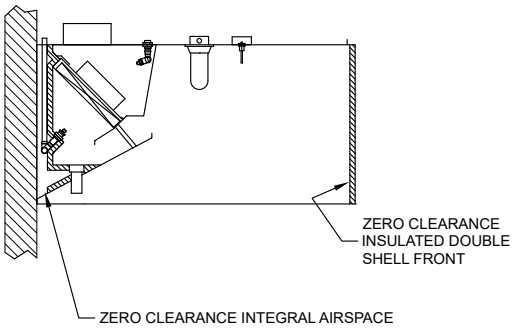

End Clearance Reduction Options

One inch (2.54 cm) layer of insulation factory-installed on the end of the hood (optional) meets zero inch requirements for clearance to combustible surfaces under the clearance reduction methods.

Three inches (7.62 cm) uninsulated airspace installed on end of hood (optional). Meets NFPA 96 requirements for clearance to limited combustible surfaces.

HOOD ELEVATION VIEW WITH END CLEARANCE REDUCTION

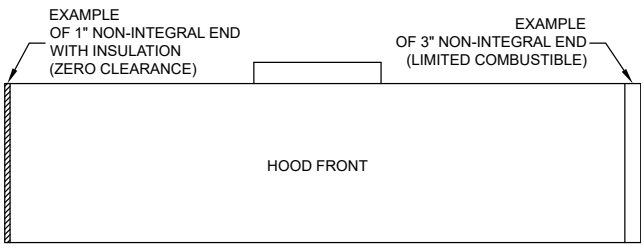

Installing Duct Collars

Exhaust Duct Collars

1. The exhaust duct connection needs to be located within 48 in. (121.92 cm) from the center of the hood length to the center of the duct connection and within shaded area as shown.

Top View of the Hood

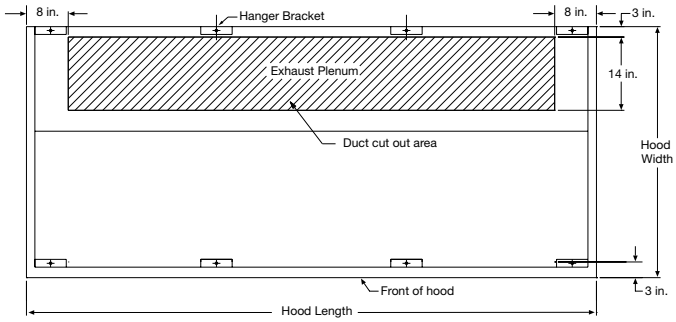

NOTE

Wash / mist solenoid valves and possibly a 12x12x4-inch hood control board enclosure will be mounted on top of the Auto Scrubber hood near the left or right-hand side. Avoid interference with these items by keeping the exhaust collars 20 inches from the end of the hood where these components are mounted.

2. The exhaust duct connection is to be a continuous liquid-tight weld. Utilizing the 1” (rectangular collars) or 1/2” (round collars) flange, weld with a non-ferrous filler wire, such as silicon bronze or stainless steel filler wire. Protect all stainless steel areas from weld splatter.

Supply Duct Collars to the Plenum

Place the duct collar(s) over the opening, fastening with tack-welds at 1 to 2 in. (2.54 to 5.08 cm) intervals, or sheet metal screws at 3 to 6 in. (7.62 to 15.24 cm) intervals.

Installing the Back Supply Plenum

Install the Supply Duct Collar

1. Find the center of the back supply plenum.
2. If the back supply plenum is to have one opening, cut the opening such that it is centered at L/2 from the plenum end. (Fig. 1)
3. If the back supply plenum is to have two openings, cut openings such that they are centered at L/4 from each end of the plenum. (Fig. 2)
4. Place the duct collar(s) over the opening(s), fastening with screws or tack-welds every 4 to 6 in. (10.16 to 15.24 cm). (Fig. 3)

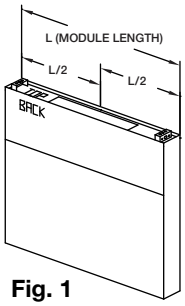

Fig. 1

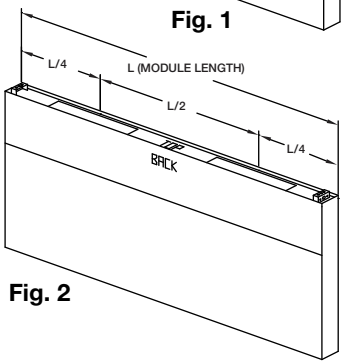

Fig. 2

Hang the Plenum

5. Hang the back supply plenum from the ceiling.

   The back supply plenum needs to be mounted 31.25 in. (79.375 cm) above the finished floor. This is measured from the lowest rear edge of the back supply plenum to the finished floor. (Fig. 4)

   Hang using threaded rod placed through the hanger brackets.

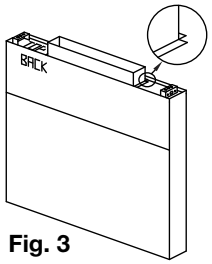

Fig. 3

6. Fasten the back supply to the wall, going through the lower back supply wall.

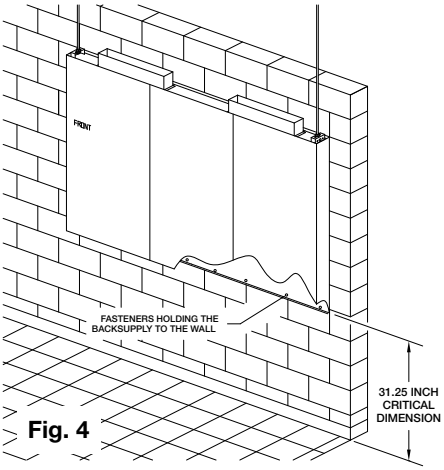

Fig. 4

- These fasteners are to help maintain the location of the back supply, and are not intended to hold the weight of the back supply unit.
- The fasteners should not interfere with the removable air diffusers.

Ductwork

Exhaust - As specified in NFPA 96, Ch. 7.5 (latest edition), exhaust duct systems must be constructed in the following manner:

Materials: Ducts shall be constructed of and supported by carbon steel not less than 1.37 mm (0.054 in.) (No. 16 MSG) in thickness, or stainless steel not less than 1.09 mm (0.043 in.) (No. 18 MSG) in thickness.

Installation: All seams, joints, penetrations, and duct to hood collar connections shall have a liquid-tight external weld. If you have an automatic fire damper, please refer to that manual for installation instructions now.

Supply - Supply ductwork (where applicable) should be connected to the hood in a manner approved by the local code authorities.

NOTE
For hoods with fire dampers in the exhaust and supply duct collars, an access panel for cleaning and inspection shall be provided in the duct. This panel shall be as close to the hood as possible but should not exceed 18 in. (45.72 cm).

For proper installation of duct collars when they are shipped unattached, see page 8.

Continuous Capture Plenum Hoods

1. Remove the support angles provided for support during shipping on the open end panels. Install and level both hoods.

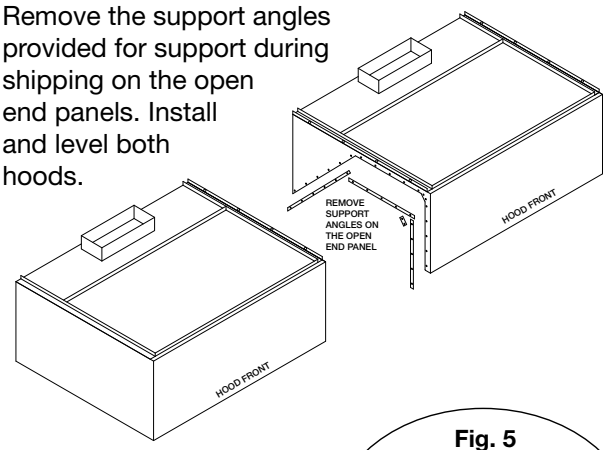

2. After leveling, secure the hoods together by tack-welding and/or bolting the angles that are located at the top of the hoods along its width (Fig. 5).

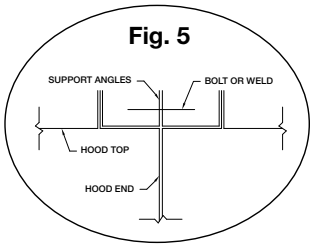

Fig. 5

3. Next, fasten the hoods together at its inside plenum profile using u-clips and bolts (Fig. 6). Caulk this joint with NSF Approved silicone caulk (GE SCS1009 or its equivalent). The caulk is not provided.

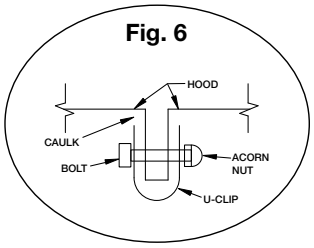

Fig. 6

Installing External Supply Plenums

NOTE

The supply plenum is provided with plenum clips that assist in hanging the plenum. Do not hang plenums using only the clips. Threaded rod or uni-strut must also be used.

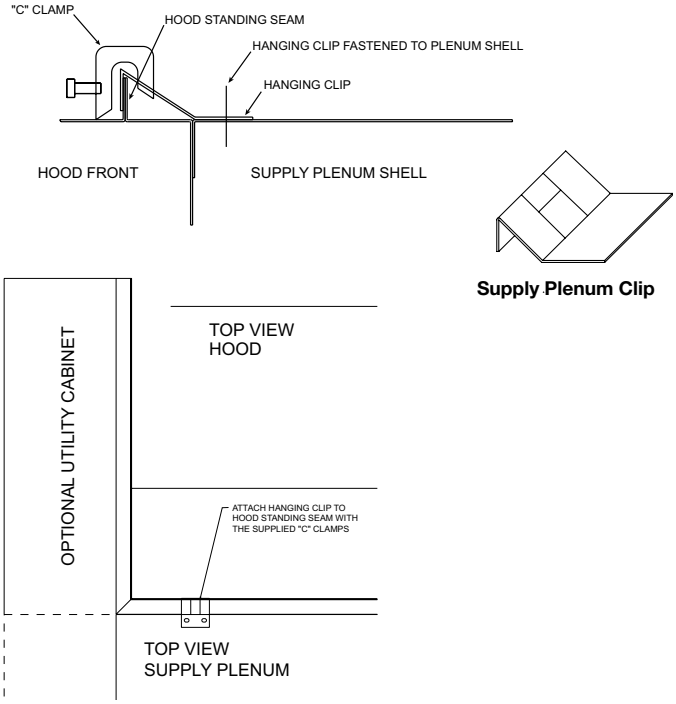

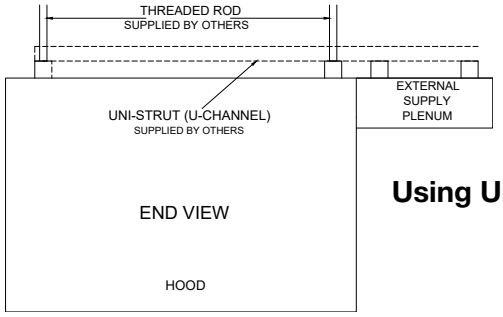

Using Uni-strut

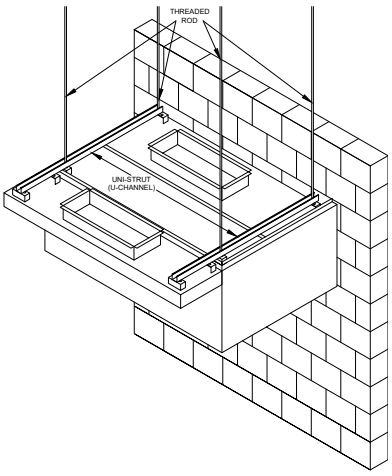

Uni-strut (supplied by others) supporting the hood may be cantilevered over the end of the hood where applicable. Utilizing the external supply plenum's hanger brackets, securely fasten to the uni-strut.

Air Curtain Supply (ASP) Mounted with uni-strut and threaded rod

When using the uni-strut (supplied by others), it must be bolted to the hood and external supply plenum hanger brackets.

NOTE

The uni-strut needs to be the full length of the hood and the external supply plenum.

Using Hanger Brackets and Threaded Rod

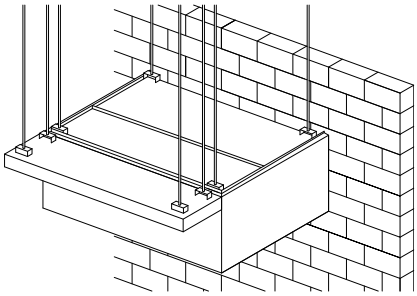

Air Curtain Supply Plenum (ASP)

1. Insert 1/2 in. (12.7 mm) diameter threaded rod (by others) into hanger brackets on the external supply plenum top. Raise and hang the external supply plenum from adequate roof or ceiling supports.

NOTE

Ensure the external supply plenum is installed flush with the hood front and is plumb and level by adjusting the threaded rod(s). There should be no gap between the bottom of the external supply plenum and the hood after installation and adjustments are completed.

2. The external supply plenum should be resting lightly against the hood. The hood is only used to position the plenum; it is not intended to support the plenum. All hanger brackets on the external supply plenum must be used and the plenum must be properly supported while lifting to prevent damage or distortion. The external supply plenum must be level to operate properly.
3. It is recommended that caulk be applied at the mating seams and surfaces of the external supply plenum, the hood, and the wall. If the external supply plenum is next to a wall, you will need to caulk around the surface next to the wall. Caulk the joints with NSF Approved silicone caulk (GE SCS1009, or its equivalent). The caulk is not provided.

Installing the Supply Duct Collar to the Plenum (if shipped loose)

Place the duct collar(s) over the opening, fastening with tack-welds at 1 to 2 in. (2.54 to 5.08 cm) intervals, or sheet metal screws at 3 to 6 in. (7.62 to 15.24 cm) intervals. It is suggested that the duct collar be attached to the supply plenum before installing the supply plenum.

Installing Backsplash/Sidesplash Panels

Flat Backsplash/Sidesplash Panel

Material: Stainless

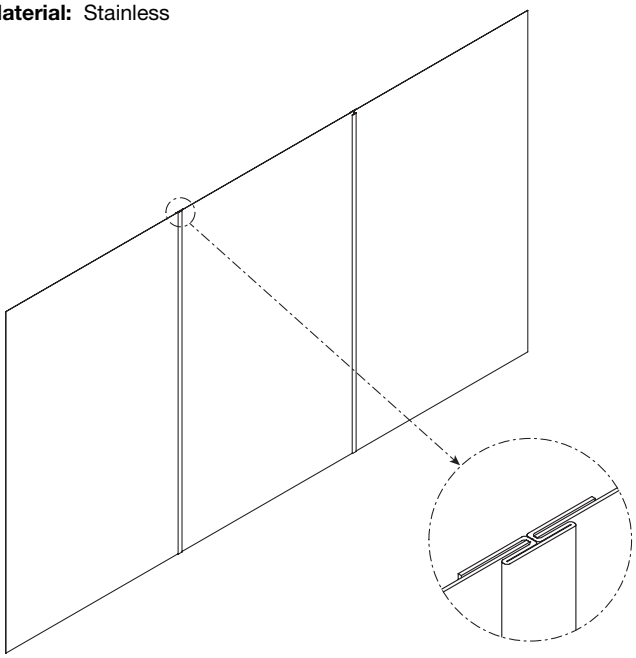

NOTE

- Panel length up to 47.25 inches (1200.15 mm) wide ship in one piece; panel lengths over 47.25 inches (1200.15 mm) ship in multiple pieces when panel height is <66 inches (1674.4 mm) or >80 inches (2032 mm).
- Panel length up to 48 inches (1219.2 mm) wide ship in one piece; panel lengths over 48 inches (1219.2 mm) ship in multiple pieces when panel height is ≥66 inches (1676.4 mm) or ≤80 inches (2032 mm).

1. After hood is hung into position, slide the flat flange of the backsplash/sidesplash panel behind the back/side of the hood. If the hood is provided with flat backsplash/sidesplash panels, divider bars will be provided. Install divider bars between panels as shown in the flat backsplash/sidesplash panel section view.
2. After the panels and dividers have been positioned, drill holes in the panel and fasten to the wall. (Fasteners provided by others). The holes should be spaced to adequately secure the panel to the wall.
3. Caulk the joints between the hood and the panel with NSF Approved silicone caulk (GE SCS1009 or its equivalent). Caulk provided by others.
4. Caulk the joint between the panels when multiple insulated panels are required with NSF Approved (GE SCS1009 or its equivalent). Caulk provided by others.

Insulated Backsplash/Sidesplash Panel

Material: Stainless
Insulation: 1 in. (25.4 mm)

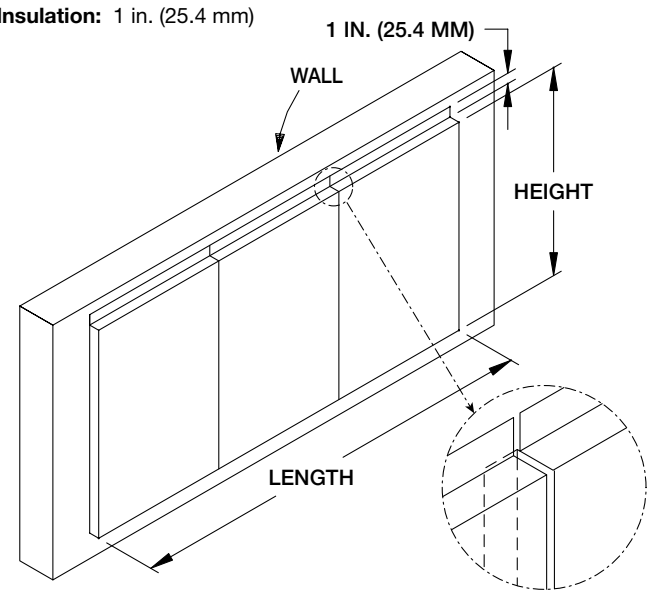

NOTE

Panels up to 45 in. (1143 mm) wide ship in one piece; over 45 in. (1143 mm) in multiple pieces.

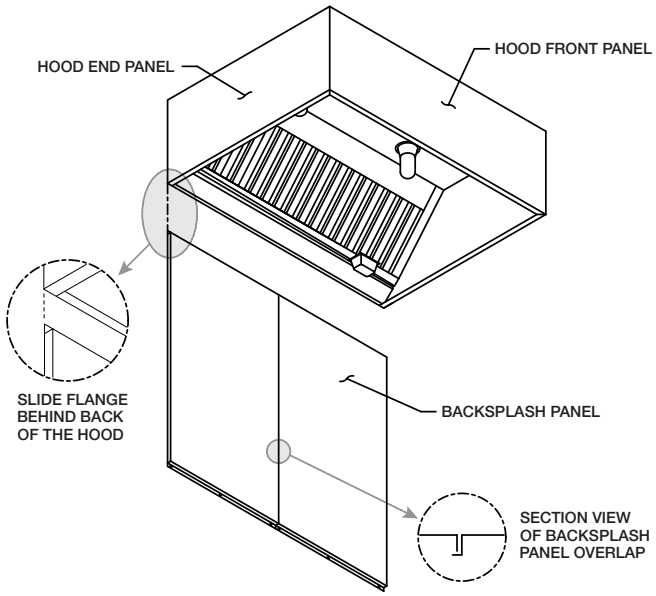

Installing End Skirts

1. After the hood is hung in position, line up the top of the end skirt with the end panels of the hood.
2. Drill a hole in the hood end panel to line up with the hole in the end skirt. Attach the end skirt with a 1/4 in. bolt and cap nut to the inside of the hood, or tack-weld the end skirt to the hood.
3. Position the end skirt against the wall and attach. The method depends on the wall construction. (Fasteners provided by others).
4. Caulk the internal joint formed by the end skirt and the hood end panel with NSF Approved silicone caulk (GE SCS1009 or its equivalent). The caulk is not provided.
5. To allow for ease in cleaning, also caulk all the external seams.

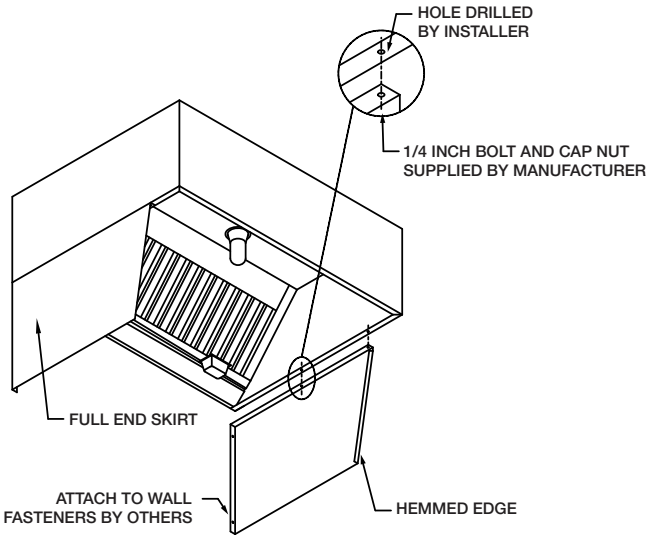

Plumbing Connections

TOP VIEW OF KITCHEN CONTROLS (KC) CABINET

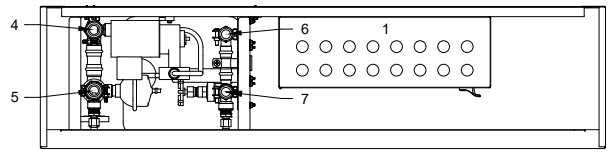

FRONT VIEW OF KITCHEN CONTROLS (KC) CABINET

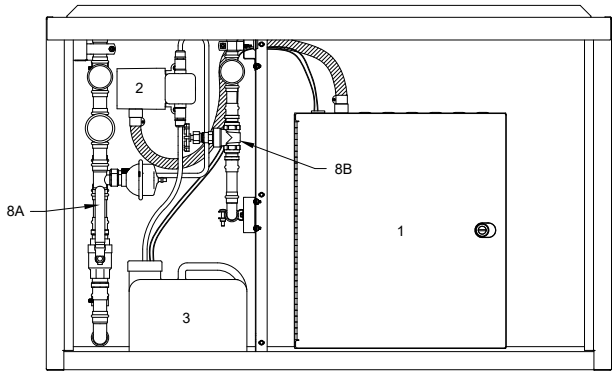

1. Electrical Control Enclosure
2. Detergent Pump
3. Detergent Tank
4. Hot Water Outlet Connection to Hood
5. Hot Water Inlet Connection
6. Cold Water Mist Outlet Connection to Hood (if equipped)
7. Cold Water Mist Inlet Connection (if equipped)
8. Inlet Valve

1. Install the factory provided backflow preventer (shipped loose) and drain connection per local codes.

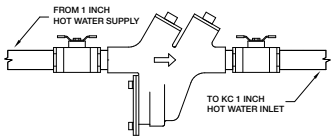

Backflow Preventer

2. Bring 1-inch hot water supply line to the backflow preventer.
3. Plumb 1-inch line from outlet of backflow preventer to the hot water inlet in the control cabinet.
4. If the cabinet is remote mounted, connect the hot water outlet on the controls cabinet to the hot water inlet on the top of the hood.
5. If system is configured for cold water mist, bring 0.75-inch water piping to the cold water mist inlet in the control cabinet.
6. If the cabinet is remote mounted and the system is configured for cold water mist, connect the cold water mist outlet on the controls cabinet to each hood with a cold water mist solenoid valve.
7. Plumb 2-inch drain on each hood to grease trap (floor).

NOTE

- Hot water and cold water mist field plumbing connections will have a protective plug.
  RED PLUG = HOT WATER
  BLACK PLUG = COLD WATER MIST
- Hot water temperature should be 140°F (60°C).
- While the hood is washing, water pressure in the control panel should be between 40 and 70 PSI (275.8 and 482.6 kPA).
- Cold mist water pressure should be between 20 and 40 PSI (137.9 and 275.8 kPA).

Detergent Tank Installation

The detergent tank is located in the plumbing section of the KC cabinet. The tank provided can hold up to 2.5 gallons of detergent. It will need to be checked periodically depending on detergent use and filled with the recommended chemical detergent. The tank is also equipped with a float that will trigger an alarm to warn the user when detergent is low.

Steps for removal and installation of the detergent tank are as follows:

Removal:

1. Disconnect the two float switch wires from DS-A and DS-B terminal blocks inside the KC panel.
2. Remove the 1/4-inch detergent line that enters the tank thru the screw on cap.
3. Lift out the detergent tank from the utility cabinet.
4. Unscrew the 63 mm cap from the tank; this will remove the float assembly.
5. Fill the tank with the approved detergent.

Install:

1. Install the 63 mm cap and float assembly into the detergent tank.
2. Lift the detergent tank back into the utility cabinet.
3. Install the 1/4-inch detergent line thru the hole in the 63 mm cap.
4. Connect the two float switch wires back to the DS-A and DS-B terminals inside the KC panel.

Detergent Requirements

Detergent model X-701 manufactured by ZEP, Inc., is recommended by Accurex for use in the wash system. This product is biodegradable, non-caustic, and safe for kitchen staff to use. If X-701 detergent is not used, the cleanliness of the exhaust plenum and filters cannot be guaranteed.

NOTE

- X-701 is manufactured by ZEP, Inc., Atlanta, GA, USA. For details and ordering information, call 1-800-371-6858.
- If washed once a day, the 2.5 gallon detergent tank will last approximately 24 to 30 days depending on filter type.

Preventative Maintenance

The following practices will prolong the life of the detergent pump:

- Keep detergent tank filled.
- Avoid spilling detergent on the exterior of the pump.
- Clean the detergent tank at least every six months.
- Clean the detergent line strainer at least every six months.
- Check tightness of all fittings periodically.

The detergent pump motor has sealed bearings which do not require lubrication.

Typical Plumbing Connection Layout

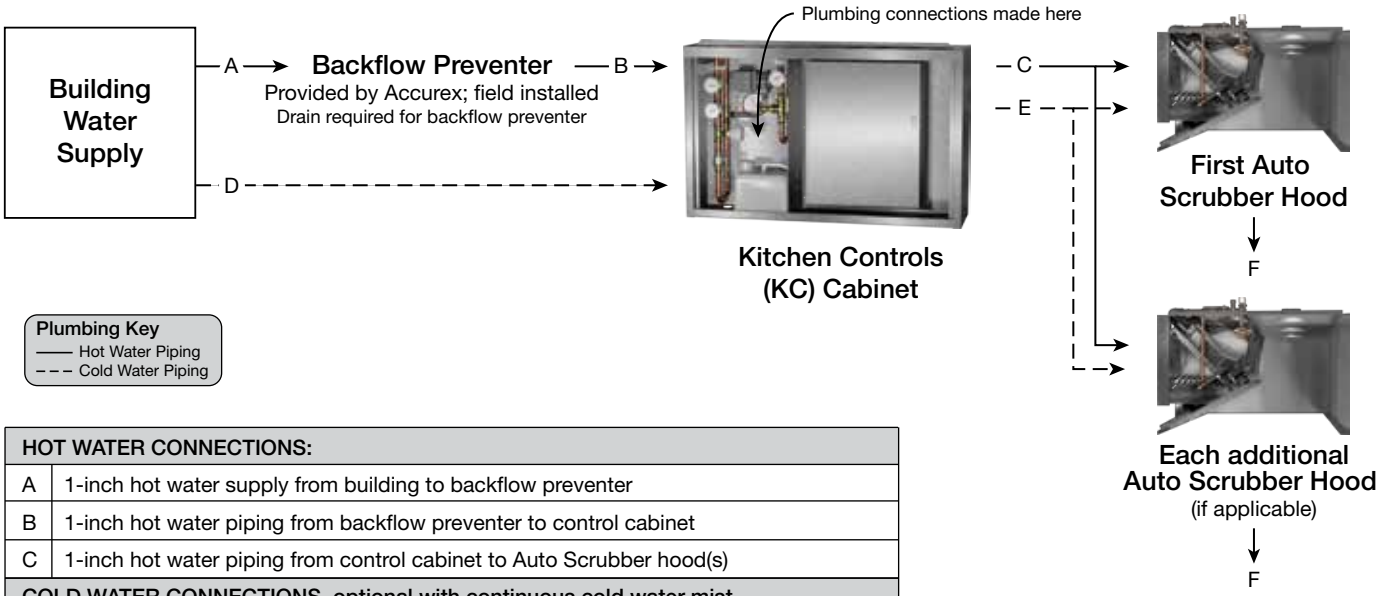

HOT WATER CONNECTIONS:	
A	1-inch hot water supply from building to backflow preventer
B	1-inch hot water piping from backflow preventer to control cabinet
C	1-inch hot water piping from control cabinet to Auto Scrubber hood(s)
COLD WATER CONNECTIONS, optional with continuous cold water mist	
D	3/4-inch cold water supply from building to control cabinet
E	3/4 inch cold water piping from control cabinet to Auto Scrubber hood(s)
DRAIN CONNECTIONS FROM AUTO SCRUBBER HOOD(S):	
F	2-inch male NPT connection to building drain with grease trap (one per hood section)

Electrical Connections – Hood Control Enclosure(s)

NOTE

For detailed information on the Kitchen Controls (KC) cabinet, please refer to the KC Installation and Operations Manual which can be found on the Accurex website, accrurex.com.

Hood control enclosures will be factory mounted standard and located either on top of the hood section, or inside a utility cabinet on the hood section.

All field wiring requirements for hood control enclosure will be shown on sticker on inside of the door/cover of the panel.

Field connections may need to be connected to:

- Terminal blocks (open side)
- Direct to removable screw terminals on the left/bottom side of the hood control printed circuit board (HCB)

NOTE

All wiring of electrical equipment must be done to meet NEC and local codes

NOTE

It is recommended that shielded wire be used for all low voltage connections (24 volts or less) to prevent signal interference with other high voltage circuits.

NOTE

All 115 VAC field wiring (or higher) must be routed through hard or flex conduit. Al low voltage field wiring should be plenum rated if not routed through conduit. Field wiring should not come in contact with the surface of the hood. To reduce the likelihood of electromagnetic disturbance, avoid routing high and low voltage cables in the same conduit.

TYP. KITCHEN CONTROLS PANEL LAYOUT - HOOD CONTROL BOARD

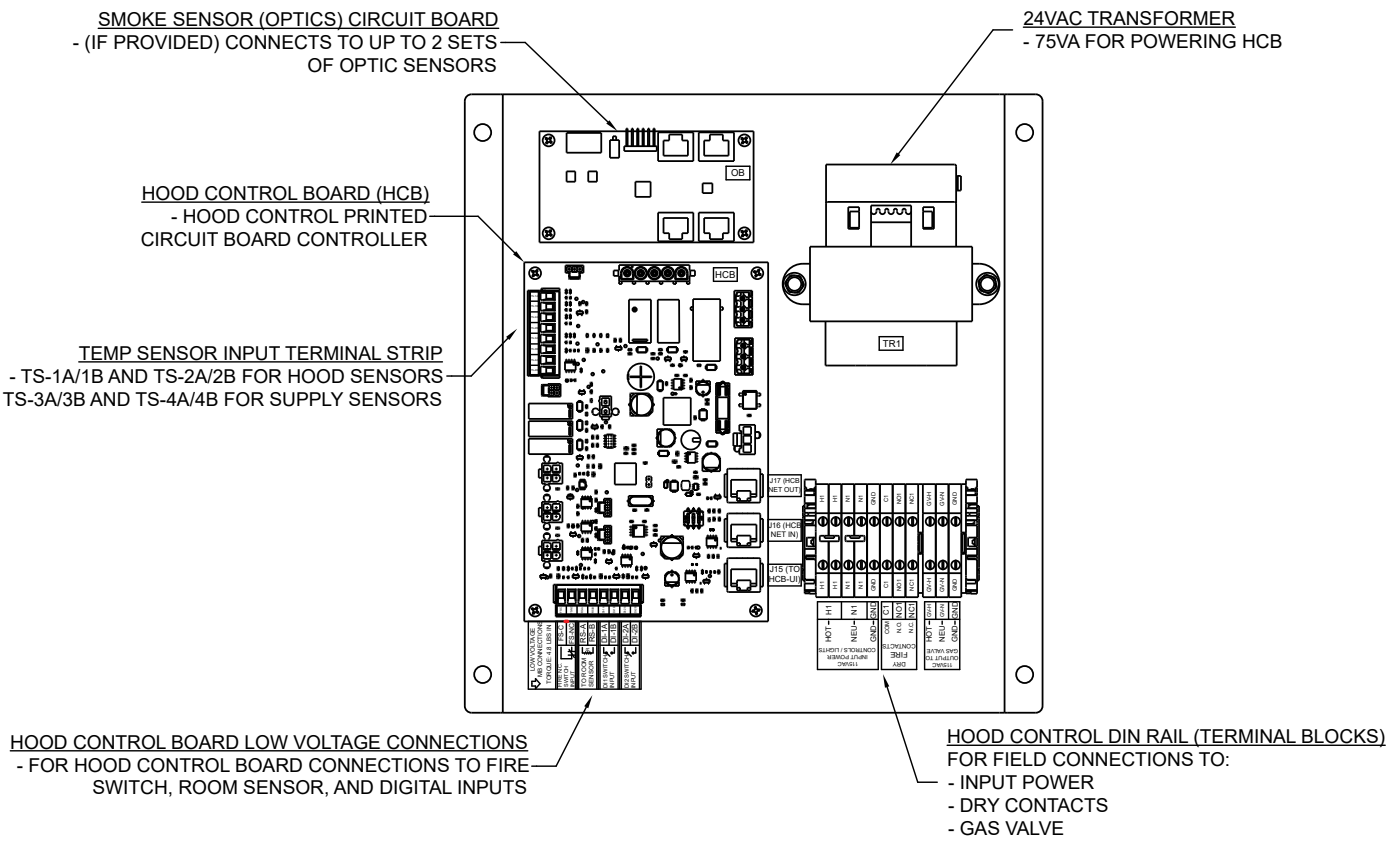

Power for Hood Controls/Lights

115VAC or 230VAC 50/60Hz 1Phase (see job-specific wiring diagram on door/cover of hood control enclosure for panel power/hood light requirement). Land hot on terminal block H1, land neutral on terminal block N1, and land ground on terminal block GND. This should come from non-shunted 15A building breaker.

Example:

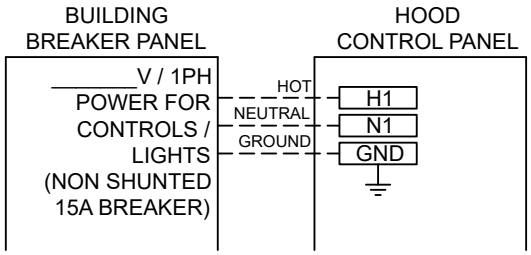

HCB Fire System Dry Contacts

Fire system dry contacts are provided for controlling external devices, such as shunt trip breakers and/ or appliance contactors that need to know when the fire system wet chemical has been released. These contacts will only function if fire system switch (common and normally-closed) is wired to the FS-C and FS-NC on the hood control board (HCB).

- Terminal block C1 – Common
- Terminal block NO1 – Normally Open
- Terminal block NC1 – Normally Closed

Example:

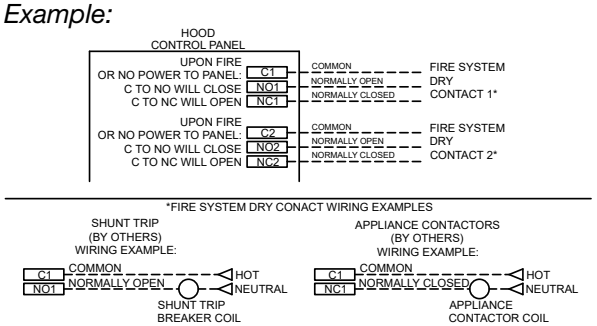

NOTE

Do not use these contacts for providing signals to the building fire alarm panel, as they will also switch state if power is ever lost to the control panel. Use separate spare fire system switch instead (mounted in fire suppression release).

NOTE

Do not use these contacts for shunt trip breakers and/or appliance contactors if the job site will experience frequent brownouts or blackouts. Use a spare fire system switch instead (mounted in the fire suppression release).

NOTE

Contacts rated for 8A and 250VAC max.

NOTE

The fault contacts inside the hood control enclosure will act as a 'local' fault, meaning ONLY the hood control board fire fault and MB fire fault will cause these fault contacts to switch state. Any other HCB fire fault occurring on the network will not cause these fire fault contacts to switch state. For a 'global' fire fault (fault contacts that switch state if the main board or ANY of the hood control board goes into a fire fault), use the dry fire contacts provided in the main enclosure.

HCB Power for Gas Valve – *If equipped*

If configured for HCB gas reset, then there will be terminals provided to supply either 115VAC or 230VAC to energize a field provided gas valve. GV-H is hot output, GV-N is neutral output, and GND is ground.

Example:

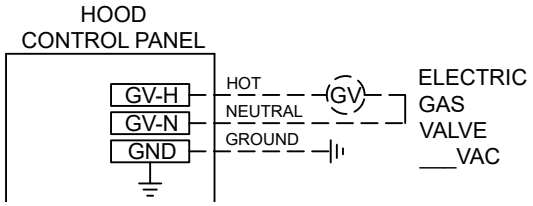

HCB Fire Suppression Fire System Switch *If equipped*

Type I hood systems may be equipped with a fire suppression system, which requires specific fan operation when a fire occurs. The fire suppression release will typically be equipped with either snap-action micro-switches, or a relay module provided with dry switch contacts. If using the fire suppression switch input, remove the jumper first before wiring in actual fire switch. Otherwise, leave the jumper installed if not using the fire suppression switch input.

Example:

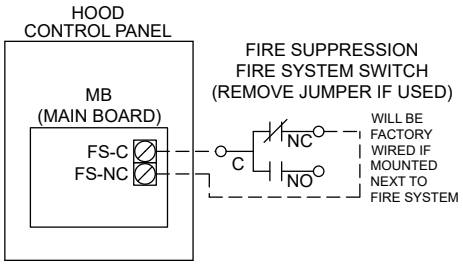

NOTE

FS-C and FS-NC should tie into DRY normally closed contact that OPENS during fire. DO NOT put any voltage onto these terminals from an external source, as this will damage the main board and replacement board will not be covered under warranty.

NOTE

The fire switch input on the hood control board (HCB) inside the hood control enclosure will act as a 'local' fire input, meaning that if it is opened it will cause only the hood section and fans linked to that specific hood zone to react to a fire condition (typical default is exhaust on, supply off, hood lights off).

HCB Room Sensor – *If equipped*

Hood control board (HCB) room sensor, if provided, will be shipped loose for remote mounting. Run 18ga – 22 ga pair of low voltage wires (provided in field) from room sensor (terminate on two screws inside) to hood control panel and land on terminals RS-A and RS-B on HCB. Sensor is not polarity sensitive.

Example:

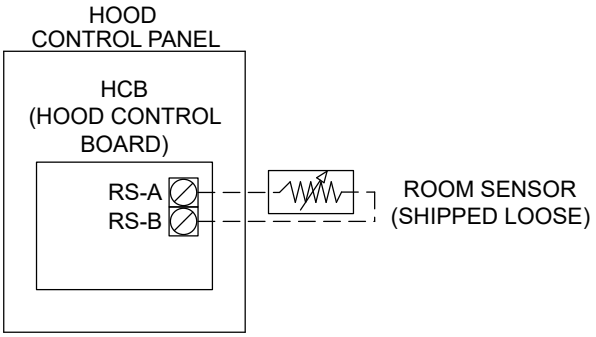

HCB Hood and Supply Temp Sensors – *If equipped*

NOTE

HCB Hood temp sensors, if provided, are typically factory connected back to the HCB. HCB Supply plenum temp sensors, if provided, will always require field wiring back to the HCB.

Hood temp sensors, if provided, may be shipped loose and therefore require field wiring back to the HCB. Run 18ga – 22 ga pair of low voltage wires (provided in field) from hood temp sensor j-box to hood control panel and land on terminals TS-1A and TS-1B (sensor 1) and TS-2A and TS-2B (sensor 2).

Supply plenum temp sensors, if provided, will be factory mounted inside the top left of the supply plenum. Run 18ga - 22ga pair of low voltage wires (provided in field) from supply temp sensor j-box to the hood control panel and land on terminals TS-3A and TS-3B (sensor 1) and TS-4A and TS-4B (sensor 2).

Example:

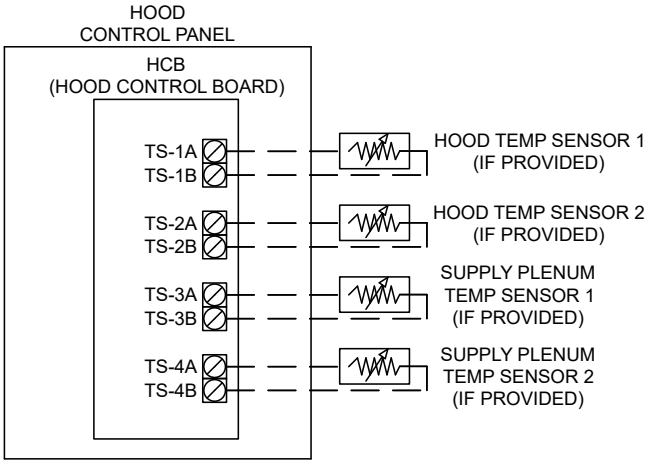

HCB Digital Inputs – *Optional*

Two digital inputs are available to initiate control upon closure detected between terminals. These can be used by BMS or an external switch or control as needed. Digital input 1 will be terminals DI-1A and DI-1B on hood control board in the hood control enclosure. Digital input 2 will be terminals DI-2A and DI-2B on the hood control board in the hood control enclosure.

Example:

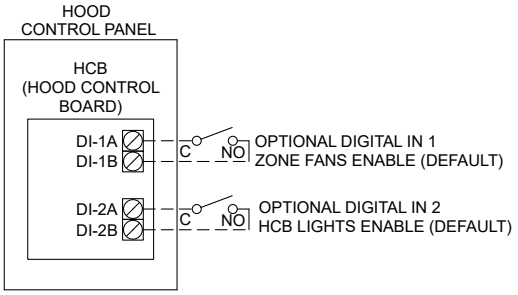

Hood Control Board Digital Input Control Options	
Option	**Description (when closed)**
Zone Fans Enable	Turn on exhaust and supply fans for hood section specific zone (DEFAULT FOR HCB DI1)
HCB Lights Enable	Turn on HCB hood light circuit (DEFAULT FOR HCB DI2)
Zone Fans and HCB Lights Enable	Turn on exhaust and supply fans for hood section specific zone and HCB hood light circuit
Wash Enable	Available if hood is an Auto Scrubber, starts hood wash sequence
Wash Disable	Available if hood is an Auto Scrubber, stops hood wash sequence
Kill Switch	Forces all fans off (unless kitchen fire is detected)

HCB User Interface

NOTE

HCB User Interface may already be factory connected. If it is, continue to the next section.

HCB User Interface and user interface CAT5 cable will be factory provided. Connect user interface back to the hood control board (HCB), from RJ45 port on the back of the user interface board to the HCB J15 RJ45 port in the hood control enclosure. User interface factory provided cable will be CAT5, shielded, and plenum rated so it does not need to be routed through conduit.

Example:

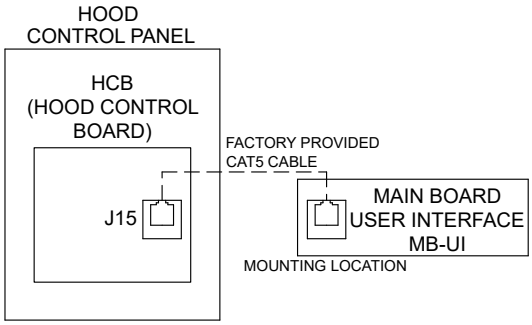

HCB Network Connections

For advanced configurations, each hood section will have a hood control board enclosure. Each hood control board needs to be connected to the previous hood control board (daisy-chained) until eventually being connected to J17 on the main board in the main enclosure. Plug and play CAT5 cables are provided for connecting hood to hood and hood to main enclosure.

NOTE

The last hood control board in line needs to have the End-Of-Line resistor set to “ON” position. If this isn’t set, communication issues can occur on the HCB network.

Example:

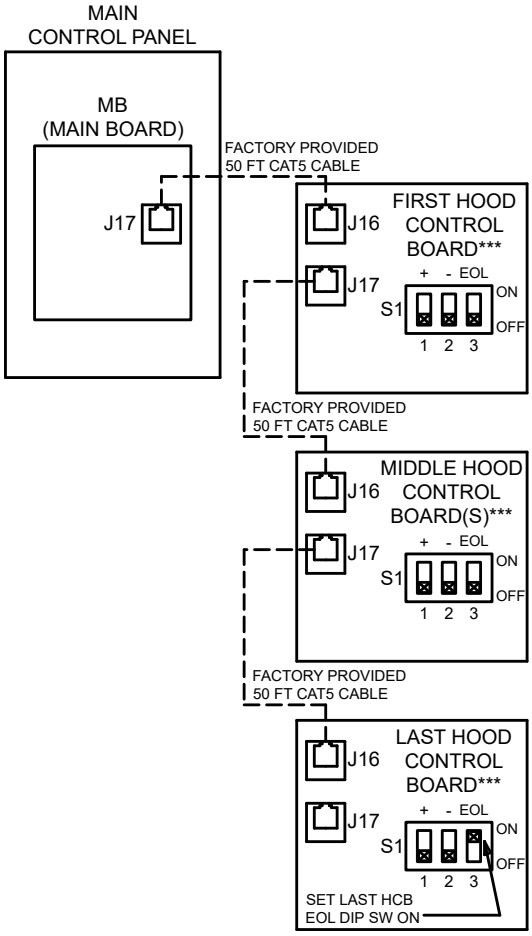

Smoke Sensor Receiver Connection – *If Equipped and Field Connected*

For advanced configurations, if provided with smoke optic sensors and the hood is continuous capture, the field will be responsible for connecting the right-most hood section receiver cable(s) (white) back to the left-most section HCB and connect them to the optics board (OB). For 1 set of optics, connect the single white cable back to the open port on channel 1 on OB. For 2 sets of optics, connect the two white cables back to the open ports on channels 1 and 2 on OB.

Example:

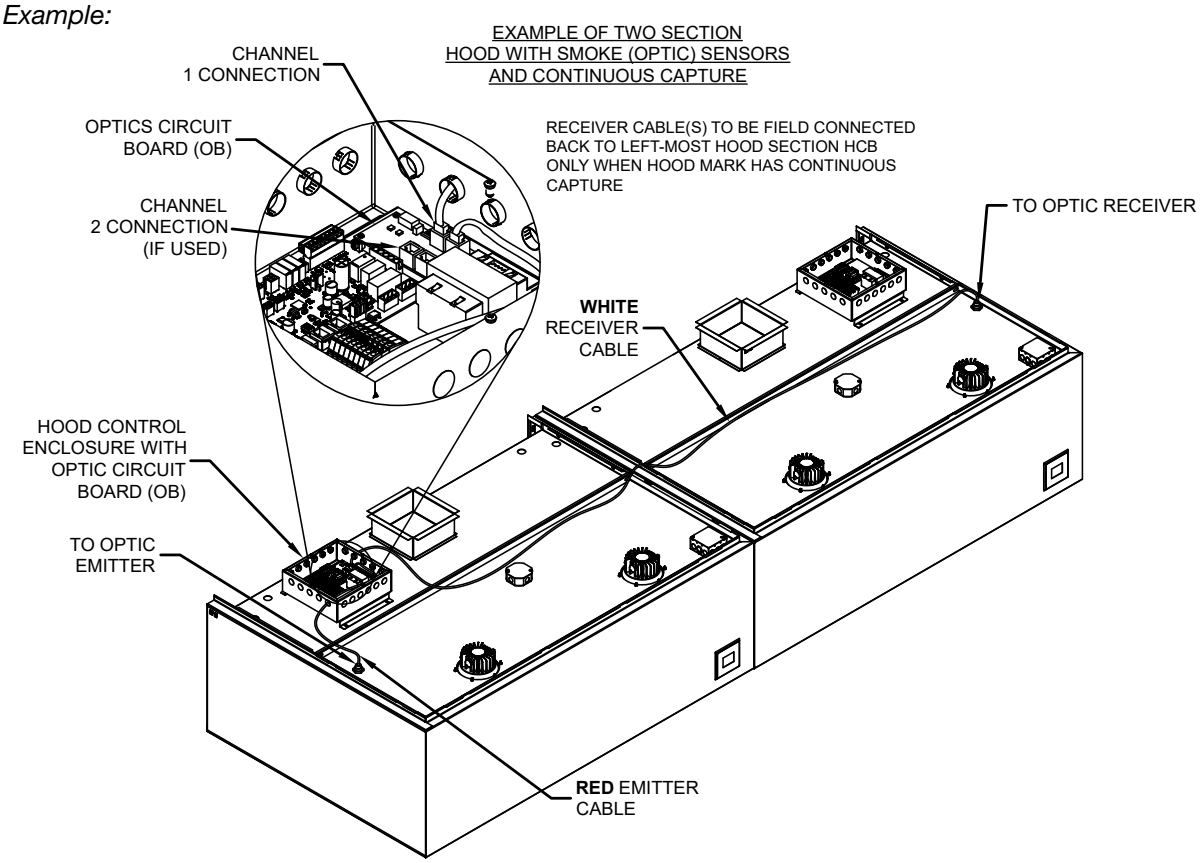

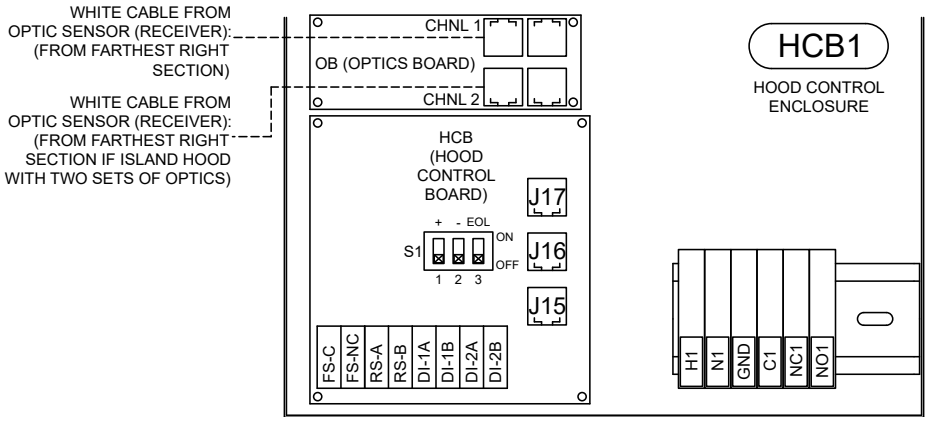

Hood Enclosure Electrical Connection Checklist

Power for Hood Controls/Lights

- ☐ 115 VAC or 230 VAC 1Phase power for control/lights (terminal blocks H1, N1, GND)

HCB Fire System Dry Contacts

- ☐ Fire contact for shunt trip/appliance contactor control (terminal blocks C1, NO1, NC1)

HCB Power for Gas Valve - *if equipped*

- ☐ 115 VAC or 230 VAC 1Phase power to gas valve (terminal blocks GV-H, GV-N, GND)

HCB Fire Suppression Fire System Switch - *If equipped*

- ☐ Common on switch to FS-C on hood control board
- ☐ Normally-closed on switch to FS-NC on hood control board

HCB Room Sensor – *If equipped*

- ☐ Low voltage 2-wire from room sensor (terminal blocks RS-A and RS-B on hood control board)

HCB Hood and Supply Temp Sensors – *if equipped and field-wired*

- ☐ Hood temperature sensor 1 (TS-1A and TS-1B on hood control board)
- ☐ Hood temperature sensor 2 (TS-2A and TS-2B on hood control board)
- ☐ Supply temperature sensor 1 (TS-3A and TS-3B on hood control board)
- ☐ Supply temperature sensor 2 (TS-4A and TS-4B on hood control board)

HCB Digital Inputs – *Optional, defaults shown on page 17*

- ☐ Digital input 1 (DI-1A and DI-1B on HCB)
- ☐ Digital input 2 (DI-2A and DI-2B on HCB)

HCB User Interface (UI) – *If field connected*

- ☐ Connector factory provided CAT5 cable from UI to J15 port on hood control board

HCB Network Connections

- ☐ Connect factory provided CAT5 cable from main board J17 port to first hood control board J16 port
- ☐ Connect factory provided CAT5 cable from first hood control board J17 port to next hood control board J16 port
- ☐ Continue to connect each hood control board to hood control board using factory provided CAT5 cable(s)
- ☐ Set EOL resistor on final hood control board on the line to ON position

Smoke Sensor Receiver Connection – *If equipped and field connected*

- ☐ Connect optic receiver white cable from right-most hood section to OB channel 1 in left-most hood section hood control enclosure
- ☐ If present, connect second optic receiver white cable from right-most hood section to OB channel 2 in left-most hood section hood control enclosure

Installing Enclosure Panels

Before installing the enclosure panels, make sure the hood is hung in position with all the ductwork attached and all fire system and electrical connections completed.

1. Position the end enclosure panels on the hood, and clamp into place with clamps provided or tack-weld the panels into place.
2. Fasten the end enclosure panels to the wall; method depends on wall construction. (Fasteners provided by others).

   If the hood is a double island, bolt the end enclosure panels together. (Fasteners provided by others).
3. Position the front enclosure panel(s) on the hood, and bolt to the end enclosure panels with the 5/16 in. bolts provided in the hardware package.
4. Tack-weld or clamp the front enclosure panel(s) to the hood. If clamps are used, they must be positioned 4 in. (10.16 cm) from the ends and in the center of the front enclosure panel.

   If hood is provided with supply plenums, the front enclosure panel should be tack welded or use self-tapping screws on the inside of the front panel to secure the panel in place to the ASP.
5. To allow for ease of cleaning, caulk the external seams with NSF Approved silicone caulk (GE SCS1009, or its equivalent). The caulk is not provided.

NOTE

Installation instructions may not be applicable for concrete ceilings.

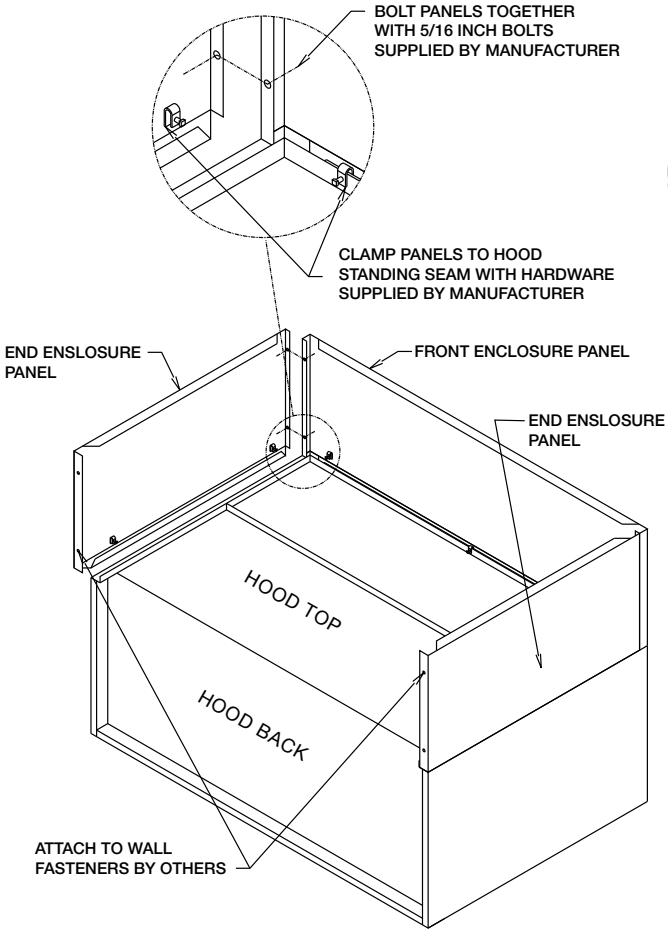

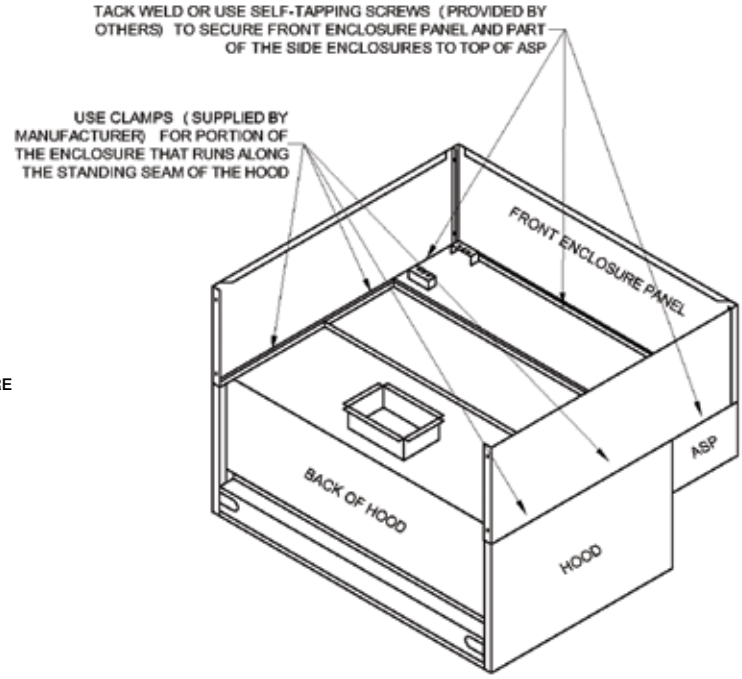

Double Island Canopy Style Hoods

NOTE

Before hanging the hoods, please verify the hood marks to ensure the correct hood is hung on the correct side.

A double island hood is created by installing two wall style hoods back to back. Use the installation procedure described for single island canopy hoods; install and level both hoods. After leveling, secure the hoods together by tack-welding and/or bolting the rear mounting brackets together.

Initial System Start-Up

1. Clean the control cabinet of any debris that may have entered the cabinet during installation.
2. Add detergent to the detergent tank in the cabinet.
3. Turn power on to the hood and control cabinet and fans via building breakers.
4. Check electrical power is correct for hood controls, lights (if applicable) and fans (if applicable).
5. Confirm the hood control board user interface (HCB-UI) is powered and operational display should be illuminated.
6. If the HCB-UI has a fan button, turn the fans on via the HCB-UI. Check fan rotation and confirm exhaust and supply air volumes are correct (per design). After this has been completed, turn the fans off.
7. Turn on water supply. Check for any leaks.
8. **Prime the detergent pump.** On the main board user interface (MB-UI) connected to Settings > General Settings > “Prime Detergent Pump” screen. Pressing “Prime” button on the bottom of the screen will energize the detergent pump.

   Monitor the detergent line and press the “Cancel” button once the detergent reaches the hot water line. This will stop the detergent pump.

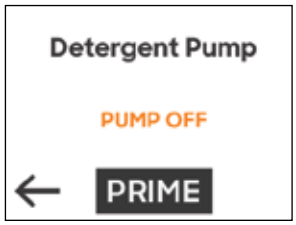

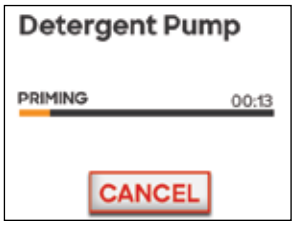

NOTE

Prime detergent pump feature will disable automatically after 15 seconds. It may be necessary to press this button multiple times until the detergent reaches the hot water line.

9. If the filter access doors are not installed, install them now. Instructions for installing filters and access doors can be found on page 27.

NOTE

Ensure the access doors are installed before starting any wash cycles. Running a wash cycle without the doors in place will result in water spraying on the cooking line-up/area below the hood.

10. **Run a test wash.** On the HCB-UI, navigate to Settings > Diagnostics > “Wash Status” screen. Press the “Start” button at the bottom of the screen. This will begin a hood wash cycle.

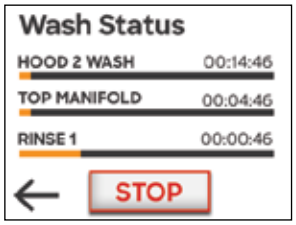

While the hood is washing, ensure water is not leaking through the edges of the access doors or anywhere else in the exhaust plenum. Ensure the grease drain and trap are not plugged, or kitchen flooding may occur.

Water pressure **while the hood is washing** should be between 40 and 70 PSI. Monitor the inlet pressure and temperature gauge in the KC cabinet through one full wash cycle.

At any time, the test wash can be aborted by pressing the “Stop” button at the bottom of the Wash Status screen on the HCB-UI.

System Operation

NOTE

The information given in this section provides basic instructions for operating the hood control board user interface (HCB-UI) provided with the KC panel. For more detailed information regarding the operation of the control panel, as well as all electrical and plumbing requirements, please reference the Kitchen Controls (KC) Installation, Maintenance and Operation Manual. This manual will ship with the control package and can also be found on accurex.com

Fan Operation

If the HCB-UI is equipped with “Fans” button, start/stop the fans exhausting and supplying the hoods from the HCB-UI.

Press the “Fans” button on the home screen on the HCB-UI to start/stop the fans associated with the hood section.

NOTE

Fans will automatically be turned on if temperature sensors inside the hood detect cooking activity. They will not be able to be turned off again until cooking activity is no longer detected.

Hood Light Operation (if equipped)

If the HCB-UI is equipped with “Lights” button, turn on/off the hood lights from the HCB-UI.

Press the “Lights” button on the home screen on the HCB-UI to turn on/off hood section lights.

Wash Operation

A hood wash can be initiated through a number of different options.

Wash by Button: A hood wash cycle can be started by pressing “Wash” button on the HCB-UI (default Wash Button control is set to Start/Stop).

Wash by Digital Input: A hood wash cycle can be started using one of the digital inputs on the HCB inside the hood control enclosure on top of or inside a utility cabinet on the hood. There are two digital inputs available that can be configured for “Wash Enable” (see DI-1A/1B and DI-2A/2B).

Wash by BMS Interface: A wash can be initiated by BMS writing a 1 to the corresponding HCBx Hood Wash point. Entire points list can be found in KC Panel Installation and Operations manual.

Wash by Scheduler: A hood section wash can be started on a specific day(s) of the week at a specific time of day. These settings can be adjusted through the main board user interface under “Wash Scheduling” sub-menu.

Wash Sequence of Operation

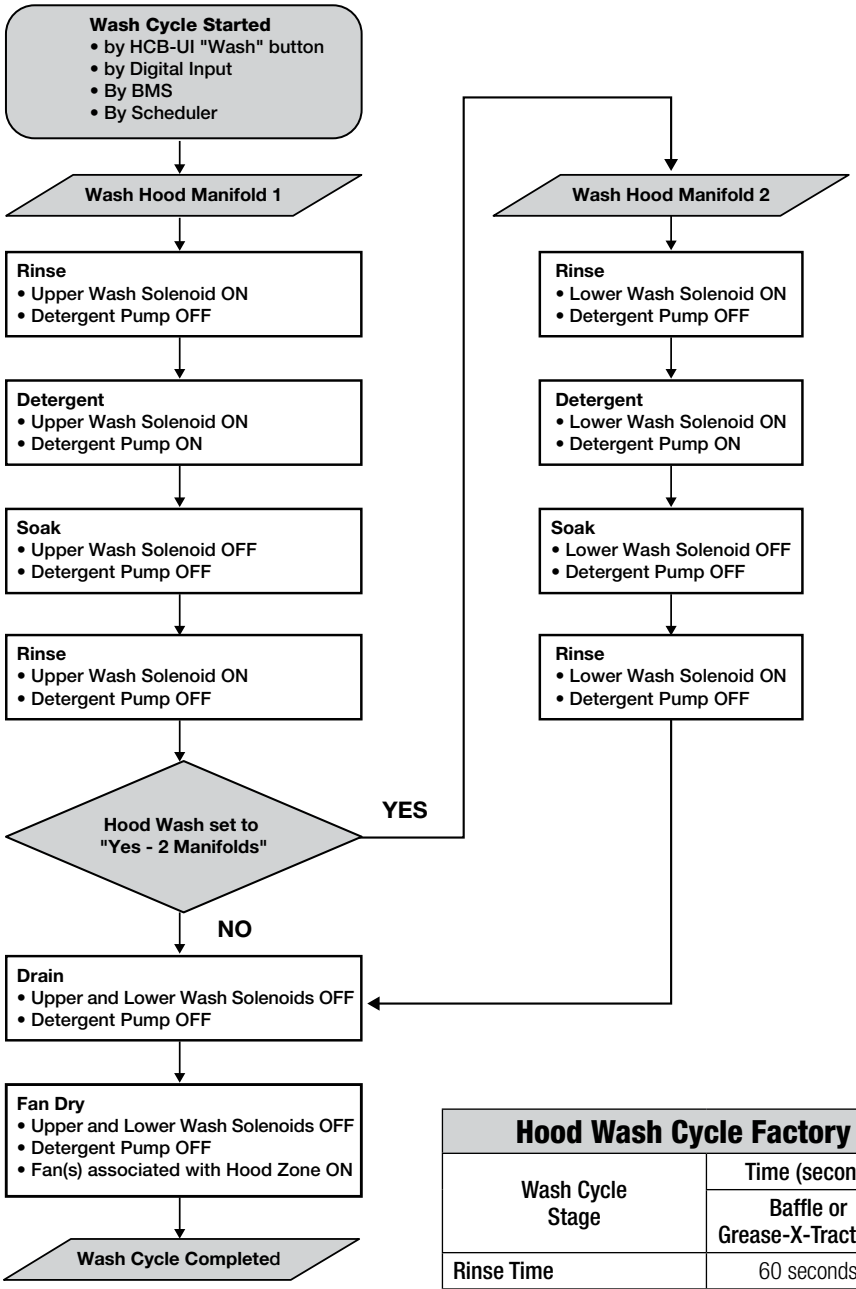

NOTE

The wash times are based on filter cleaning tests using filters coated heavily with oil and then baked-on using high temperatures. Actual required cleaning times will vary based on cooking equipment, fuel type, cooking frequency, and the food prepared. The table shown above should be used as a starting point. After a few weeks, the field can make adjustments as necessary based on the cleanliness of the filters upon removal/inspection (see Maintenance on page 27).

Hood Wash Cycle Factory Default Times

Wash Cycle Stage	Time (seconds) Based on Filter Type	
	Baffle or Grease-X-Tractor™	Grease Grabber™
Rinse Time	60 seconds	60 seconds
Detergent Time	60 seconds	120 seconds
Soak Time	60 seconds	60 seconds
Drain Time	60 seconds	60 seconds
Fan Dry Time	4 minutes	4 minutes

Water sprays during "Rinse" and "Detergent" portions of wash cycle.

Standard hood consists of two wash manifolds; one above the filters (upper) and one below the filters (lower). Manifolds are constructed with one nozzle per foot of manifold.

With default times, total water consumption for a hood section wash will be 4.62 gallons per ft of hood length for hoods with baffle or X-Tractor filters, and 6.16 gallons per ft of hood length for hoods with Grease Grabber dual stage filters. While washing, maximum possible flow rate for hot water will be 0.77 gallons per minute per ft of hood length.

For cold water mist, flow rate when misting is on (when fans are on for that hood section) will be 0.1 gallons per minute per ft of hood length.

Balancing the Kitchen Exhaust System

To determine the proper dining room air balance:

1. Refer to engineering drawings to determine total exhaust CFM from dining areas. (exhaust fans, heating and air conditioning units, rest rooms, etc.)
2. Determine the total CFM of make-up air supplied to dining area.
3. Subtract #1 from #2 above. If the result is a negative number, a negative pressure is present in the dining area. In this case, kitchen exhaust odors could be drawn from the kitchen to the dining area. Therefore, exhaust or supply air should be adjusted to provide a slight positive pressure in the dining area.

To determine proper kitchen air balance:

1. Refer to engineering drawings to determine total exhaust from the kitchen area. (exhaust hoods, dishwasher hoods, etc.)
2. Determine total CFM of make-up air supplied to kitchen area. (make-up air hoods, heating and air conditioning units, etc.)
3. Subtract #1 from #2 above. The result should be a negative number. If the result is a positive number, a positive pressure is present in the kitchen area. Kitchen odors could be forced into the dining area. Also, a positively balanced kitchen area can adversely affect the performance of the exhaust hood.

CAUTION

According to NFPA 96, Ch. 8-3 Replacement Air: Replacement air quantity shall be adequate to prevent negative pressures in the commercial cooking area(s) from exceeding 4.98 Pa (0.02 in. wg).

NOTE

The airflow rates were established under controlled laboratory conditions.

NOTE

Greater exhaust and/or lesser supply air may be required for complete vapor and smoke control in specific installations.

Testing Hood Air Volume

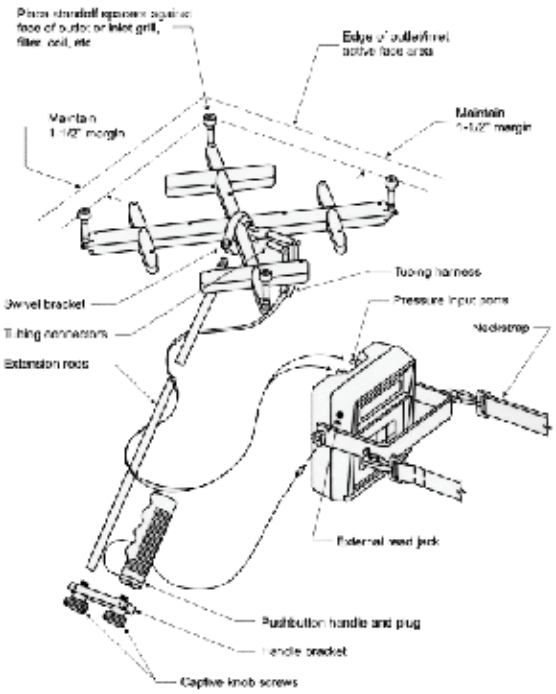

Short Ridge Meter Components

For measuring exhaust airflow rates (cubic feet per minute = CFM), use a short ridge meter to measure velocities along the inlet slot of the hood. To ensure accurate data, all appliances should be on. Multiple locations need to be tested as outlined below to ensure an accurate reading.

To take velocity readings along the length of the hood, the short ridge meter must be evenly spaced along the length of each door to provide two readings per door. Vertical placement of the short ridge meter along the inlet slot is shown.

Hood Length	Number of Test Locations
48 to 69 inches	2
70 to 109 inches	4
110 to 139 inches	6
140 to 174 inches	8
175 to 192 inches	10

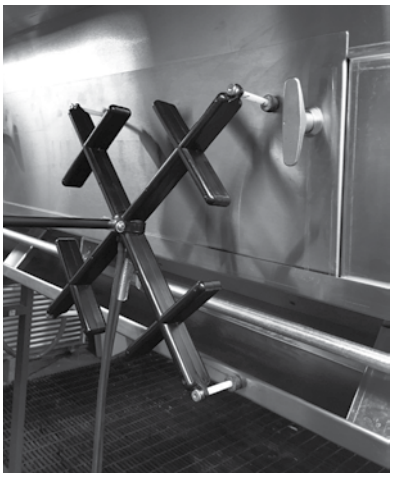

After the appropriate number of readings have been taken from the inlet slot of the hood, an average reading can be calculated by summing the velocity readings and dividing the total value by the number of readings taken.

$$\text{Average Velocity} = \frac{\text{Sum of Velocity Readings}}{\text{Number of Readings}}$$

Next calculate the total hood airflow volume (CFM) by using the following equation:

Hood CFM = [(Length of Hood in inches x 3.398) x (Average inlet slot velocity x 3.6)] ÷144

NOTE

The constants 3.398 and 3.6 are factory derived for use with the Auto Scrubber hood.

Calculation Example:

Four (4) inlet slot velocity readings (minimum)

Hood Length	96 inches			
Test Location (left to right; in inches)	6	27	48	69
Velocity Reading (fpm)	224	242	228	236

Average Velocity (FPM) =
(224 + 242 + 228 + 236) ÷ 4 = 233 FPM

Hood Exhaust Rate (CFM) =
[(96 x 3.398) x (233 x 3.6)] ÷ 144 = 1900 CFM

Additional Wiring Schematics

Ansul® Wiring Plan View

Snap-Action Switches may be wired as shown.
Typical examples shown.

Equipment

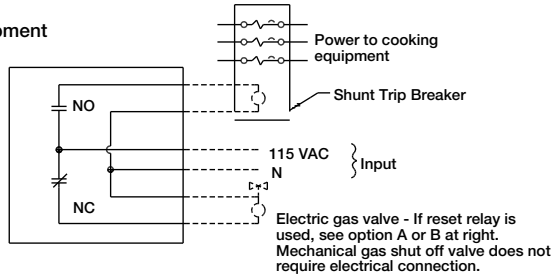

Alarms

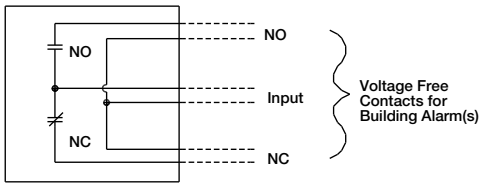

Fans

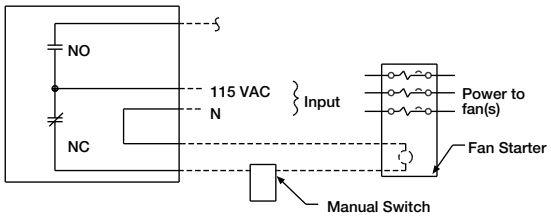

If prohibited by local codes, do not shut down exhaust fans with this method of wiring.

Manual Reset Relay
Part No. 426151

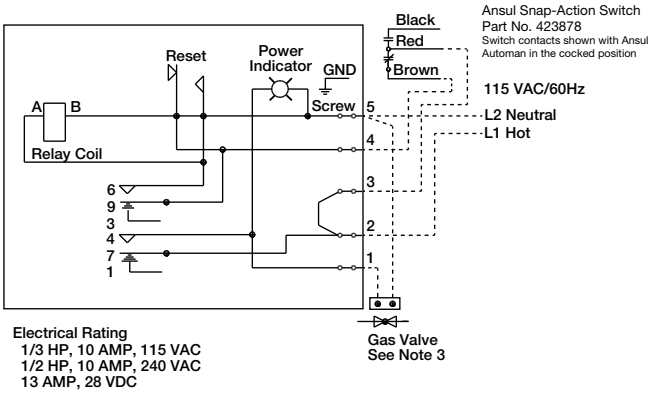

Note:
1. ------ Denotes field installation.
2. ——— Denotes factory installation.
3. Gas Valves: "UL Listed electrically-operated safety valve for natural or LP gas as needed, of appropriate pressure and temperature rating, 115V/60Hz" or Ansul gas valves.
4. Do not use black wire on snap-action switch in normal installation. Black wire may only be used for extraneous alarm, light circuits, etc.

Amerex® Wiring Plan View

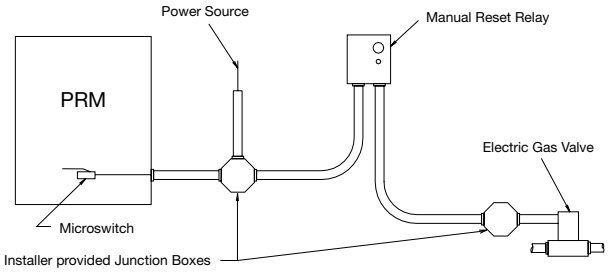

Basic Wiring Diagram

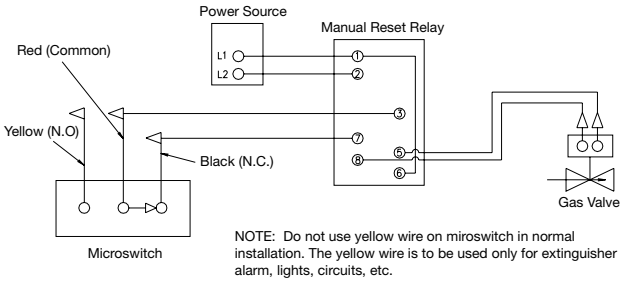

Basic Wiring Diagram

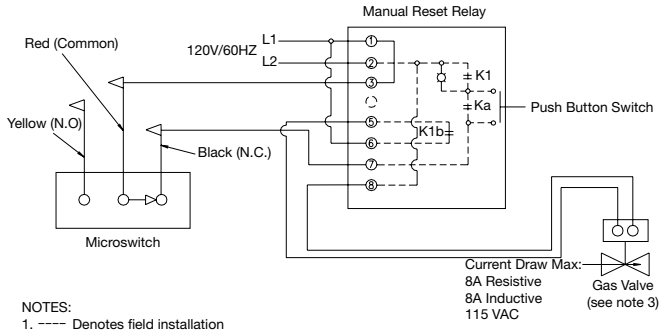

NOTES:
1. ---- Denotes field installation
2. ---- Denotes factory installation
3. GAS VALVE: UL Listed electronically-operated safety valve for natural or LP Gas as needed of appropriate pressures and temperature rating, 115V/60 Hz or Amerex gas valves, PN 12870, 12871, 12872, 12873, 12874, 12875 and 12876.
4. K1a and K1b are N.0. when K1 is de-energized.

Filters

The first or primary stage (baffle or Grease-X-Tractor™) filters and second stage (Grease Grabber™) bead filters (if applicable) need to be inspected one week after start up, then once every two weeks to make certain the filters are positioned correctly (no gaps between filters) and that the wash system is adequately cleaning the filters.

To inspect the filters, remove all access doors. Each door is held in place with two cammed latch handles. Turn the handles and remove the doors. *Images 1 and 2*.

Image 1

Image 2

Once the doors are removed the filters can be removed. If the hood contains second stage filters, these will also need to be removed. While holding the handles of the filter, push the filter up and lift the bottom of the filter out of its track. Then pull the filter out of the hood. *Images 3, 4 and 5.* Repeat this for all the second stage filters.

Image 3

Image 4

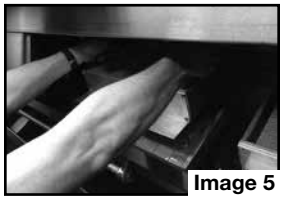
Image 5

Once the second stage filters are out, (*Image 5)* the first stage filters can be removed in the same manner. *Image 6.*

Image 6

Depending on the equipment under the hood, it might be easier to remove the filters from the left or right side. In that case, slide the filters towards the end that allows for easier removal.

After inspection, insert the filters back into the hood. Primary filters go in first, then the second stage filters (if applicable). After installing all the filters, make sure the filters are positioned correctly in the hood. There should be no gaps between the filters.

If for some reason the filters don't seem to be getting adequately cleaned, or if the filters appear damaged, consult the factory.

Capture Tank

The interior surfaces of the hood capture tank should be wiped down weekly.

Air Diffusers

The air diffusers, located at the bottom of the back supply will need to be cleaned as often as the application dictates. Inspect periodically to determine the cleaning schedule.

1. To clean the air diffusers, unfasten the screws. Remove the air diffusers from the back supply unit and wash in the sink or dishwasher.
2. Refasten with the stainless steel screws.

Troubleshooting

Problem: Exhaust fan is not operating or is not operating at design levels.	
Is the fan receiving power?	Replace fuses, reset circuit breakers, check disconnect.
Is the belt loose or broken?	Replace or tighten belt.
Is the fan rotating in correct direction?	Have the electrician correctly wire the fan.
Is the make-up air operating?	Problems with make-up air may interfere with the exhaust fan. Check the manufacturer's installation manual.
Does the airflow need to be increased?	Adjust or replace pulleys to increase fan RPM, install a larger motor.
Does the fan vibrate?	Clean the fan wheel/blade, replace fan wheel if damaged, check for loose bolts, check for broken or damaged components, check for rags and other foreign objects.

Problem: Hood is full of smoke. There is smoke coming out of the edges of the hood.	
Is the fan operating at design levels?	See exhaust fan troubleshooting section.
Is the fan correctly sized?	Refer to test and balance report, design specifications and fan curves; have an electrician check the motor amperage; try removing the filter temporarily to see if capture improves. (Make sure to replace filter to prevent risk of fire!); switch to different filters with lower static pressure.
Are the filters in good condition?	Clean filters, replace damaged filters, properly position filters.
Is there sufficient make-up air? *(Kitchen should be in a slight negative but not excessive. Check to see if there is a strong draft through an open door).*	Check make-up air unit. Increase make-up air. Make-up air should be evenly distributed throughout the kitchen.
Does the current cooking equipment match the original design?	Adjust or replace fan to match the cooking equipment load.
Are there multiple hoods on one fan?	One hood may be over exhausting and the other hood not drawing enough. Restrict second hood to help problem hood.
Are there closed dampers in the duct?	Open dampers.
Is the ductwork complex or to small?	Change to a higher static fan, modify the ductwork.
Is the ductwork obstructed?	Clear obstruction.

Problem: Smoke blows away before reaching the bottom of the hood.	
Are there cooling fans directed at the hood or cooking equipment?	Turn off or redirect fans.
Are there ceiling diffusers directing air at the hood?	Move diffusers to more neutral area or replace with a diffuser that directs air away from the hood.
Are there open windows or doors?	Close windows and doors.
Are there cross drafts or other drafts in the kitchen?	Find source of the draft and eliminate, add side skirts to hood (test with cardboard; use stainless for permanent side skirts); increase the amount of overhang on the spillage side; add a 6 in. (152.4 mm) lip around the base of the hood (test with cardboard; use stainless for permanent side skirts); make-up air should be spread out evenly through the kitchen.
Is the hood near a main walkway?	Add side skirts to hood (test with cardboard first); increase the amount of overhang on spillage side.
Are there pass-thru windows near the hood?	Adjust amount and locations of make-up air to eliminate drafts through the pass-thru windows.
Is the make-up air entering through an attached plenum?	Try turning off or reducing the amount of make-up air; block off portions of the supply to direct air away from the problem area (test with cardboard).

Troubleshooting

Problem: Pilot lights are being blown out or cooking equipment is being cooled by make-up air.	
Are there drafts from make-up air?	Try turning off or reducing the amount of make-up air; block off portions of the supply to direct air away from the problem area (test with cardboard first); remove any obstructions in front of supply that directs air toward cooking equipment.

Problem: Cold air can be felt by the cook at the hood.	
Is the make-up air entering through an attached plenum?	Try turning off or reducing the amount of make-up air; heat the supply air.

Problem: The kitchen gets hot.	
Is the hood capturing?	Hood is not drawing enough air, see sections on fan performance and hood capture.
Is the make-up air entering through an attached plenum?	Try turning off or reducing the amount of make-up air; cool the supply air.

Problem: Cooking odors in the dining area.	
Is the hood capturing?	Hood is not drawing enough air, see sections above on fan performance and hood capture.
Is there a draft through doors between the kitchen and dining area?	Decrease make-up air in the kitchen; increase exhaust air through hood.

Problem: Grease is running off the hood.	
Is there grease on top of the hood?	Exhaust duct is not correctly welded.
Is the caulk missing or damaged?	Clean problem area and recaulk.

Problem: Hood is noisy.	
Is the fan running in the correct direction?	See exhaust fan troubleshooting section.
Are the filters in place?	Replace missing filters.
Is the hood over exhausting?	Slow down fan (see exhaust fan troubleshooting section)

Troubleshooting

Problem: An Auto Scrubber hood is not washing routinely (wash cycle not activating).	
Is the system in fault?	Fire, high temperature and sensor faults will prevent a wash from starting. Correct these faults.
Are you relying on the hood to wash manually?	Make sure the “Wash” button on the HCB-UI is configured for “Start/Stop” and not “Stop Only”. Ensure (recommended after start up) the kitchen employees are pressing the WASH button daily.
Are you relying on the hood to wash automatically?	If washing via wash schedule, ensure these settings are set correctly and current date/time are accurate. If washing via digital input, ensure device responsible for closing and opening this input is working correctly. If washing via BMS, ensure BMS programming is configured correctly and correct points are being written to.
Are the wash solenoids opening/closing?	Using “Wash Solenoid Testing” screen in the Diagnostics sub-menu on the HCB-UI, test each hood solenoid and verify nozzles are spraying when solenoids are opened. If not opening, verify voltage (24VAC) is present when solenoids should be open. If solenoid is receiving voltage but the valve is not opening, the valve may be stuck or solenoid may be damaged and replacement may be required.
Is something telling the fans to run while trying to start a wash cycle?	If something is telling fans to run for any reason, this will abort a wash cycle currently in process and also prevent a wash cycle from starting. Verify no-one is turning the fans on during a wash cycle. Verify temp interlock settings are not set too low where hot water in the plenum is incorrectly detected as cooking and kicking the fans on. Verify the BMS is not forcing fans on during wash cycle. Verify no digital inputs are forcing the fans on (or digital input is configured for kill switch function) which would stop a wash cycle.

Problem: Auto Scrubber hood is washing routinely but is not cleaning the filters properly.	
Is the water temperature hot enough?	Correct water temperature plumbing to the hood. Adjust delay times between Auto Scrubber hoods to allow for the facility hot water heater to be able to heat longer.
Is the detergent empty? *Low detergent fault will be present*	Refill the detergent
Are you using the correct detergent?	Use recommended detergent; see page 12.
Are the cooking loads very heavy?	Increase the washing frequency. Increase the wash cycle and detergent timers for each sequence.
Are the nozzles clogged?	Clean/replace the nozzles.

Problem: Hood is leaking water.	
Are the access doors in place?	Make sure the access doors are in place and completely sealed.
Is condensation forming in the hood?	Hood should not be washed when food equipment is warm (not hot). Water pressure may be too high. Reduce the water pressure.
Where is the hood leaking water?	Contact the factory for further advice if the access doors are in place.

Parts List

Part Number	Description
385987	Detergent Float
481461	Wash Nozzle
456767	Cold Water Mist Nozzle
481463	24V Coil for Solenoid Valve
381050	3/4-inch Solenoid Valve
456765	Pressure Gauge
479363	Temperature Gauge
851709	16H x 16W Grease-X-Tractor™ SS Filter
851710	16H x 20W Grease-X-Tractor™ SS Filter
852881	16H x 16W Grease Grabber™ Second Stage Filter
852880	16H x 20W Grease Grabber™ Second Stage Filter
457627	16H x 16W Stainless Steel Baffle Filter
457629	16H x 20W Stainless Steel Baffle Filter
481445	2.5 Gallon Detergent Tank
481547	Backflow Preventer
459304	Drain, Air Gap for Backflow Preventer
472857	Snubber for Pressure Gauge
453682	Shock Arrestor
484148	115V 60Hz Detergent Pump

Our Commitment

As a result of our commitment to continuous improvement, Accurex reserves the right to change specifications without notice.

Product warranties can be found online at accurex.com, either on the specific product page or in the Warranty section of the website at Accurex.com/Resources/Warranty.

ACCUREX®

P.O. Box 410 Schofield, WI 54476
Phone: 800.333.1400 • Fax: 715.241.6191
Parts: 800.355.5354 • accurex.com

 © 2026 Accurex, LLC